HLWT – HORIZONTAL LINEAR WIND TURBINES

visualization

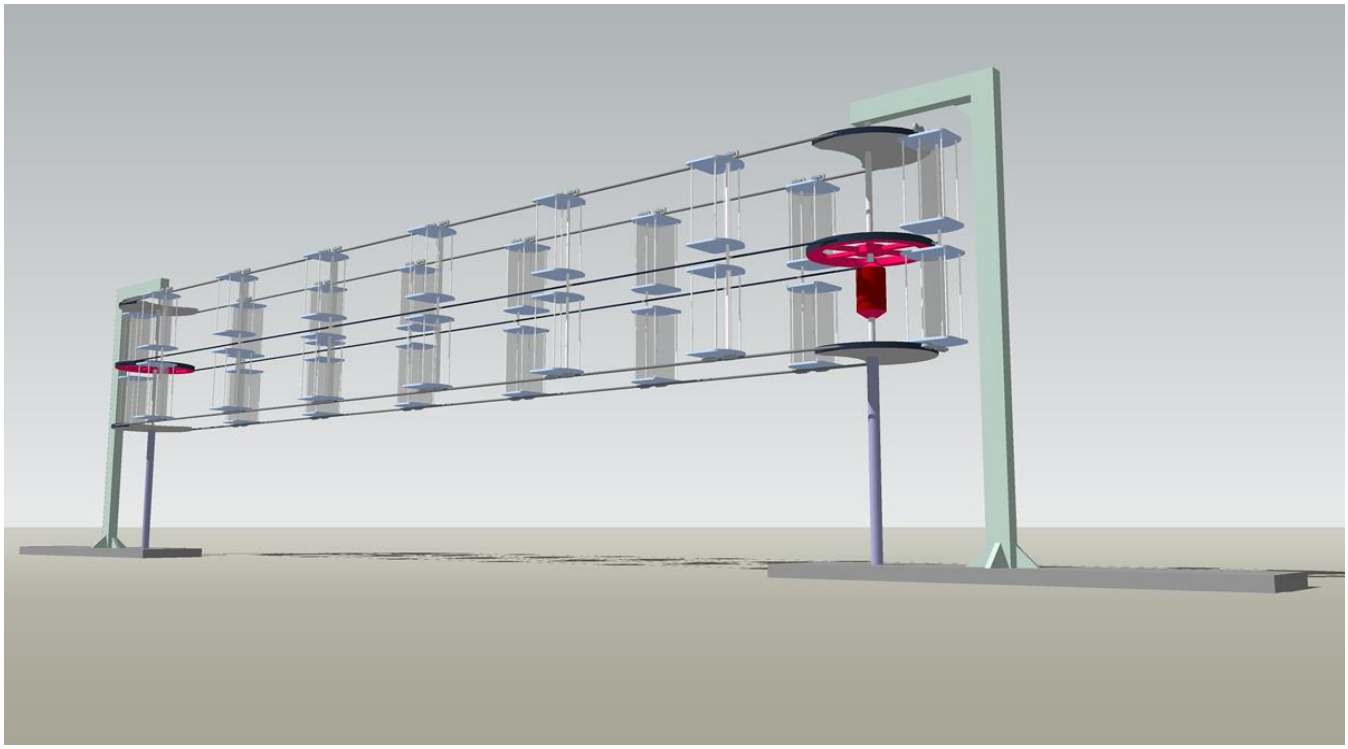

WIND CABLE CAR *(patent pending)*

CONTENTS:

1. Introduction

Increasing the need for the energy supply of the population with cheap and ecological electricity for the future, especially for electric cars and energy supply for households, is a motive for the development of new technologies in the field of renewable energy sources. It is an essential contribution to the protection of the environment and to the reduction of the carbon footprint produced by the society.

Wind energy is just one of the forms of solar energy that arises from the uneven heating of the earth's surface. The wind cable car is one of the new technologies that allows the use of wind in proximity to the human dwellings without perturbing influences that are manifested in today's common ways of using turbines

with vertical and horizontal axis of rotation. The already built wind turbines are criticized for noise, negative impact on the life of birds and in particular disproportionate interference with the appearance of the landscape. Wind energy is one of the oldest purposely used renewable energy sources. Wind power plants or wind parks (farms) are composed of aero-generators. Their principle of operation is the air flow. They convert the energy of the flowing air into electricity.

2. Purpose, application and benefit of the wind cable car

The wind cable car described in the following text and figures represents a new alternative construction wind equipment, eliminates the negative characteristics of the existing wind turbines and obtains the wind energy safely to be used by the people in their everyday lives, mainly for the propulsion of vehicles and the supply of electricity to the buildings. The meaning and benefit of searching for new structures is the construction of such facilities that would eliminate the environmental disadvantages of the existing wind farms. The disadvantages of the existing wind power plants in terms of environmental studies may include the following:

- acoustic noise
- infrasound
- stroboscopic effect
- removal of ice
- impact on birds
- impact on bats
- character of the landscape
- interference of the electromagnetic signal

visualization

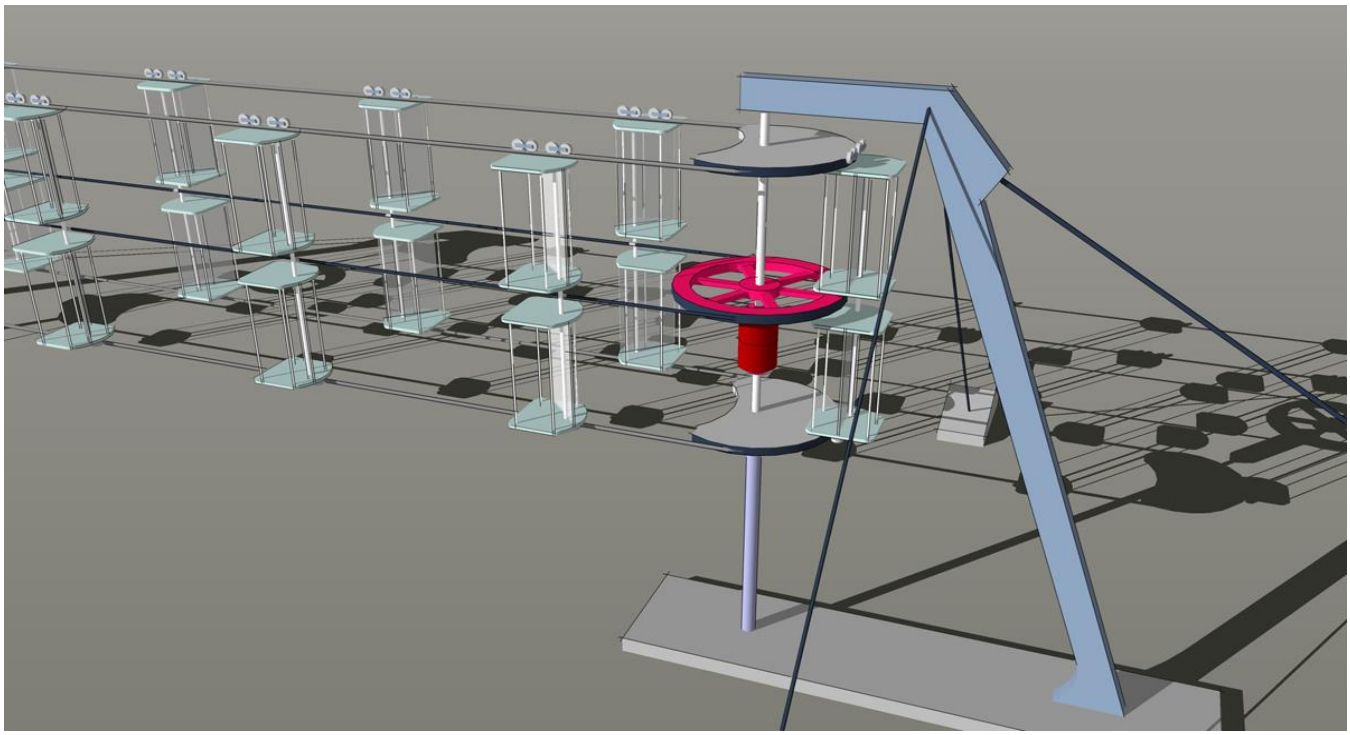

3. The basics - how it works

The basic idea when designing a wind cable car is to get more energy from small wind elements - carriages that put resistance to the wind against the air flow and connect them with a rope in a row so that they act together with a greater mechanical force equal to the sum of the forces acting on the individual carriages and concentrate this force on the drive of one alternator.

The basics of the operation of the wind cable car system is the ability of the set of the connected carriages of the new construction moving on a horizontal closed cable car way in the shape of a closed loop to perform a cyclic repetitive movement forward on the way defined by the wind power.

What is a wind cable car?

A wind cable car is a set of structural elements connected to a device that is firmly installed in the terrain and has a stationary or movable overhead way and its operation does not depend on the wind direction. The wind cable car consists of the cable car way, carriages, belt pulleys and supporting structure. Devices can be connected to the rotating parts of the belt pulleys in order to use the energy obtained from the wind, such as alternators or generators. The type of the supporting structure, the installation of belt pulleys and generators is not the subject of this article and exceeds the scope of this general explanation of the principle of operation of wind cable cars.

What is the way of the wind cable car?

The way of the wind cable car for the carriages is a firmly anchored line part of the structure, which is geometrically continuously closed in a loop. It is installed in the surrounding environment and consists of at least two load-bearing or circulating line guides. The way can be movable or stationary and is lead mostly in the horizontal direction. The moving way can have an arrangement of two ropes either next to each other or below each other. The stationary way can also have the arrangement of the line way elements next to each other or below each other. The interconnected carriages move on a fixed linear way formed by ropes, cables, rods or tubes by means of their own wheels, or on a moving way formed by a moving rope where the carriages move together with the rope that rotates around the belt pulleys at both ends. The movement of the ropes at the same speed is ensured by an inter-connection of both ropes at the moving way or in another known manner based on the chain principle. The way that has a line guide elements arrangement below each other can have a different shape of a closed polygon in the plan view and the change in the direction of the carriages movement is done around the vertical axis. This shape adapts to the nature of the surrounding terrain. The way that has the arrangement of the linear guide elements next to each other has a predominant linear character with a slight undulation of the way in the vertical direction and the change in the direction of movement of the carriages is done around the horizontal axis. The way created from linear elements can have a relatively high length between the turns of the direction, depending on the strength of the construction materials. On this way length, a large number of interconnected carriages can be fastened in a modular manner, each of which will supply partial force for the movement of the tow rope under the influence of the wind. The linear part of the way always has its supporting structure, which is located at the ends of the track and stabilizes the rotating parts of the way.

way diagram	axonometry

1 - circulating rope of the horizontal way

30 – pulley of the movable rope

31 – mast of the wind cable car

32 - guide wheel of the horizontal movable rope to the pulley

33 - reinforcement of the uniform movement of a pair of ropes

34 – basic-type wind carriage with one main rotary plate

51 – electric energy generator

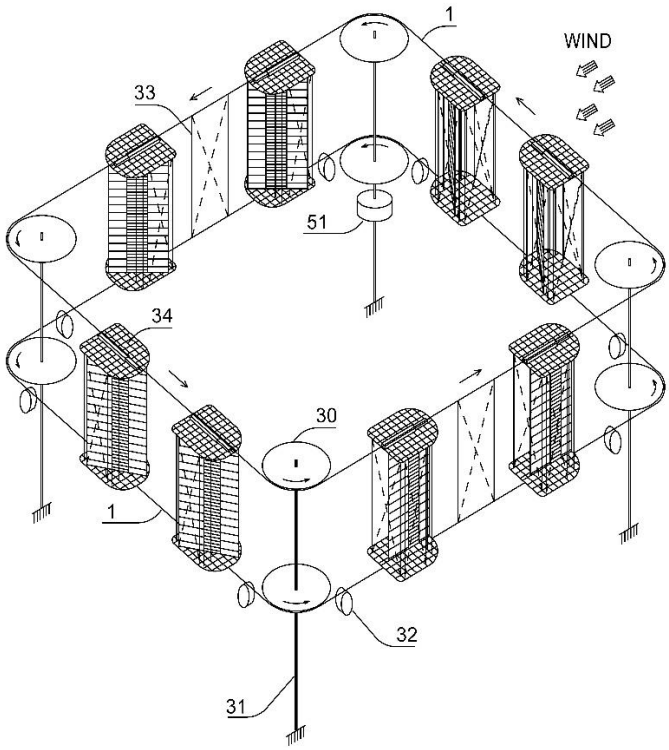

functional model from the workshop

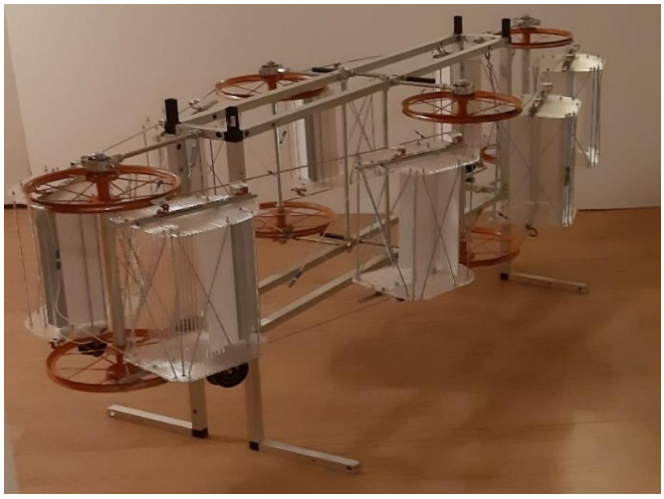

What are the wind cable car carriages?

Carriages are devices that consist of

- moving surfaces that resist wind movement,
- supporting and reinforcing construction
- construction of the carriage connection to the rope or cable.

In performing its function of converting wind energy into movement, the wind carriage can be made by several manners. The carriages are designed so that they pose only minimal resistance when moving against the wind, when moving in the wind direction they put maximum resistance and by the action of both lateral directions of the wind they cause the movement of the rope and the rope-fixed carriages in one direction. The carriages are connected to the rope by a fixed or movable style with the help of wheels.

In the case of a fixed connection with the moving way, the rotation of the carriage is fixed when the length changes between two points of connection on the straight section and on the rotating section on the way at the moment of rotation is solved by a sliding connection mechanism and in case of a wheel connection to the stationary way, the rotation of the carriage when changing the length between two connection points on the straight section and on the turning section to the way at the moment of rotation is solved by a rotating wheel connection mechanism.

The movement of the set of carriages is independent from the direction of the wind. This is due to automatic adaptation of the vertical carriage plates. The automatic adaptation of the vertical carriage plates is enabled by placing the vertical axis of rotation of the plates at a point which is advanced in front of the resulting forces of the wind on the plate in the direction of movement of the carriage. The range of rotation of the plates is defined so that the effect of the wind force on the plate causes the movement of the carriage in the desired direction.

functional model from the workshop

Description of the operation of the wind cable car

The wind carriages move at the same speed along a horizontal line. They are powered by the force of the wind which is transmitted over tilting vertical pushed surfaces formed by the plates that are a part of each carriage. The carriages move either on a fixed way on their own wheels or are firmly attached to a moving way formed of a pair of parallel closed ropes. This movement of the pair of ropes is transmitted by means of rotating pulleys at the end of the way to the torsion effect of the generator or mechanical machine.

Principles and properties of the wind cable car

In order to use wind carriages to generate wind energy, all carriages must work together and these carriages must be interconnected and lined up one behind another on a closed way. The wind pushes the carriages and when it acts on the carriage in any of the three horizontal directions except for the front opposition wind, it causes the carriages to move along with the ropes. It is analogous to the movement of a sailboat or a surfboard float driven by the wind. The principle for the operation of the present invention is the common feature of wind carriages causing that they do not have air resistance or only minimal resistance to the opposite wind, they put the highest possible resistance to the rear wind and they automatically adapt to both directions of side wind by their effective surface obliquely so that the result of the applied wind force allows the carriages to move forward. Carriages from the opposite direction of the wind are towed by the carriages that are pushed by the wind from the windward side or back side, because the wind acts on carriages here with a much higher force. The commissioning of all connected carriages and thus the functioning of the whole system to obtain energy from the wind is enabled and caused by the rotation of the moving parts of the wind carriages resistance plates.

Each individual carriage moves in individual phases of its circular motion either against the wind, by the wind or obliquely to the wind in the horizontal direction and the change in the direction of movement of the carriage is caused by the change in the direction of the carriage way. Each individual truck is able to do partial work at a specific moment by the action of the wind. If the wind blows from behind to the way, the force for moving the rope is provided by all carriages moving from back to front, because due to the wind, the rotating resistance plates are oriented so that all the resistance surfaces are turned parallel to the direction of the moving air. This is achieved by the position of the axis of rotation of the main resistor surface which is located in front of the main resistance surface and by restricting its vertical rotation in the defined angle. Analogically, this principle can be compared to the movement of a sailboat on the tailwind and to the movement on the headwind with the sails down. If the wind blows from the side on the way then the main resistance plates of the carriages on both oppositely moving ropes shall take such a position that they are turned obliquely in the wind, namely each on the opposite side and exert such a force on the carriage that it moves forward. In this position of the carriages and the main wind resistance plates to the wind, the movement of the pair of ropes is caused by all carriages with the side wind. Analogically, this principle can be compared to the movement of a sailboat in a side wind.

The safety of the entire drive system for wind energy using wind carriages circulating on closed ways is ensured by the insertion of overload protection mechanisms which, in case of extremely strong winds, turn all wind carriages in the direction against the wind, where they have minimal resistance.

4. Construction variants of ways

The division of wind cable car types according to the type of ways and the mutual position of a pair or triple of ropes forming the way.

1.1 First group - moving ways and ropes below each other.
1.2 Second group - moving ways and ropes next to each other.
1.3 Third group - stationary ways and ropes below each other.
1.4 Fourth group - stationary ways and ropes next to each other.
1.5 Fifth group - combinations of stationary and moving ways in the arrangement of ropes next to each other and below each other

The principle is that the moving ways always has a fixed connection of the carriages to the rope and the stationary ways always has a movable connection of carriages to the rope. The number of ropes on a ways with closed loops is at least two ropes and for optimal operation in practice, the number of ropes appears as 3 ropes - of which two stationary and one circulating are located in the middle.

4.1 First group -  moving ways with orbiting ropes and rigidly attached rope carts, where the ropes with two closed loops are arranged one below the other.

scheme way ground plan

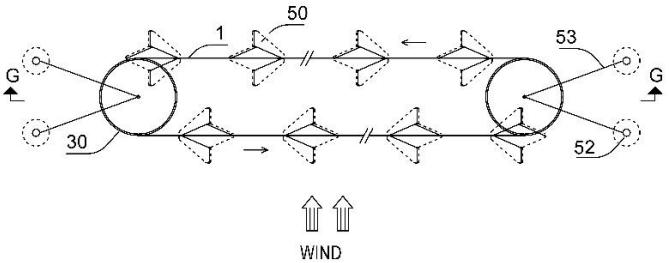

1 - circulating rope of the horizontal way

30 – pulley of the movable rope

50 – V-type wind carriages with a rotary main plate

51 – electric energy generator

52 - vertical mast or existing building

53 - horizontal supporting mast structure

55 - rotation axis of the pulleys

cross section G-G

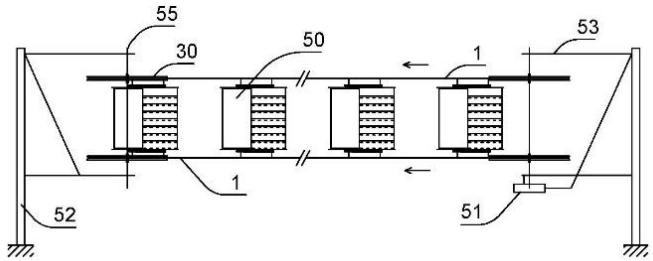

4.2 Second group - 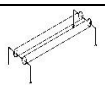 moving ways with orbiting ropes and rigidly attached rope carts, where the ropes with two closed loops are arranged next to each other.

scheme way ground plan cross section J-J

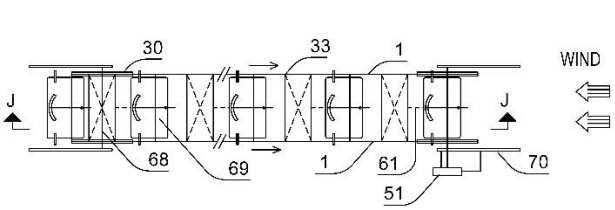

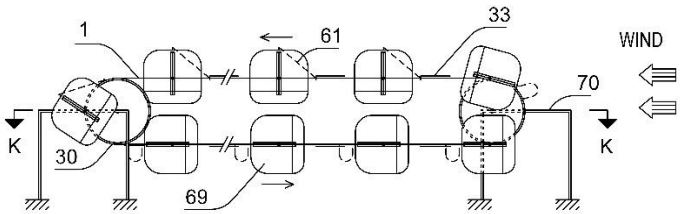

1 - circulating rope of the horizontal way

30 - pulley of the movable rope

33 - reinforcement of the uniform movement of a pair of ropes

51 - electric energy generator

61 - wire strand defining the movement range of the supporting plate to a vertical position

68 - horizontal axis of the movable way pulleys

69 - wind carriages with a tilting horizontal plate round the horizontal axis

70 - clamping structure of the wind cable car pulleys

4.3 The third group -  stationary ways with movably connected rope carts, where the ropes with two closed loops are arranged below each other.

functional model from the workshop

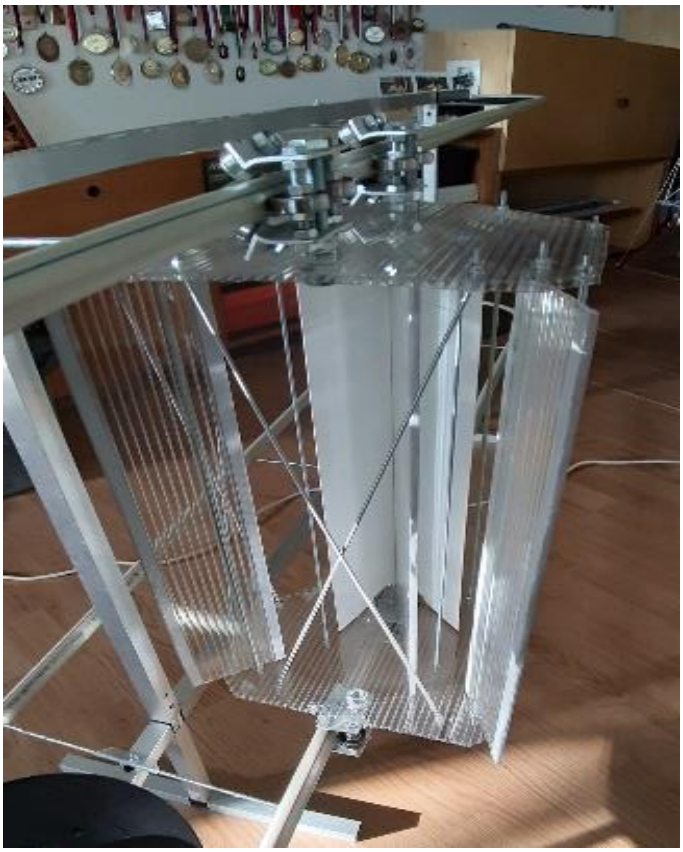

4.4 Fourth group - 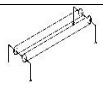 stationary ways with movably connected rope carts, where the ropes with two closed loops are arranged next to each other.

functional model from the workshop

principle of circulation and connection of circulating wheels for energy consumption

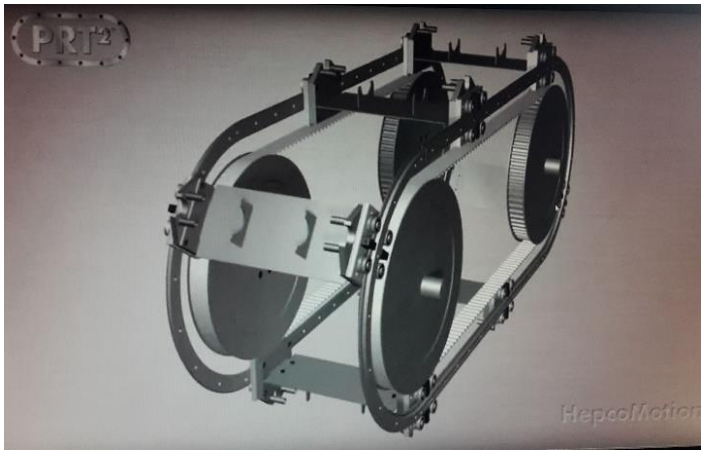

scheme

turning of the carriage | detail of movable connection

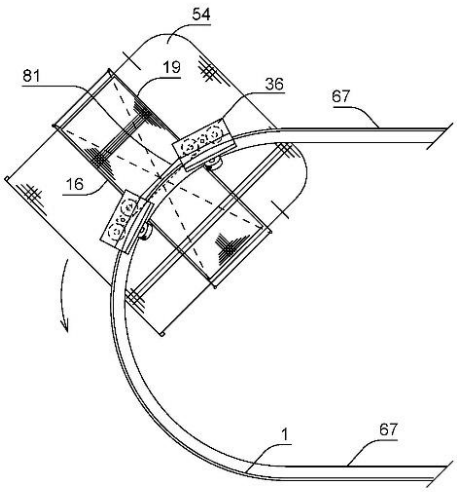

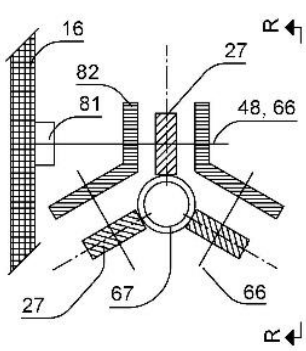

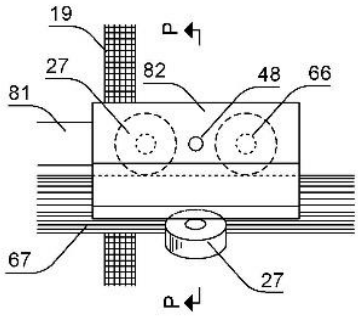

1 - circulating rope of the horizontal way

16 - front supporting vertical frame

19 - back supporting vertical frame

27 – wheel of the sliding runner structure

36 - runner consisting of a wheel set with a frame

48 - rotary connection between the runner frame and the connecting slat

54 - basic-type wind carriage with two or more main vertical rotary plates

61 – wire strand defining the movement range of the supporting plate to a vertical position

66 - wheel shaft

67 - rope or cable of a stationary way

81 - connecting horizontal slat of the vertical supporting structure

82 - frame of the sliding runner structure

When the carriages move on their own wheels, the energy from the movement of the carriages is transmitted through the auxiliary traction rope or each carriage has its own built-in rotating generator or another method of electromagnetic induction is used for the energy consumption. Fastening the truck to the stationary way so that it is not thrown down by the wind is solved on the way through a set of spatially arranged wheels. Fastening the carriage on a moving way so that it is not thrown down by the wind is secured by a fixed connection with the moving way.

functional model from the workshop in direct | in the arc

detail of movable connection

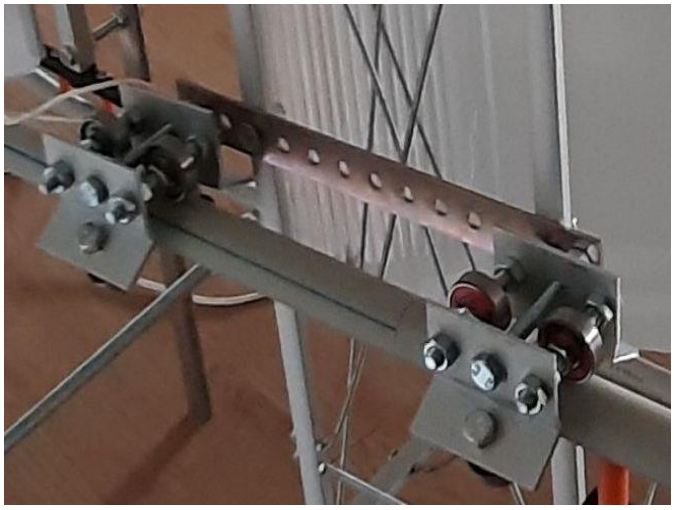

4.5 Fifth group - 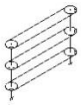 combination of stationary and moving ways in the arrangement of ropes below each other

side view

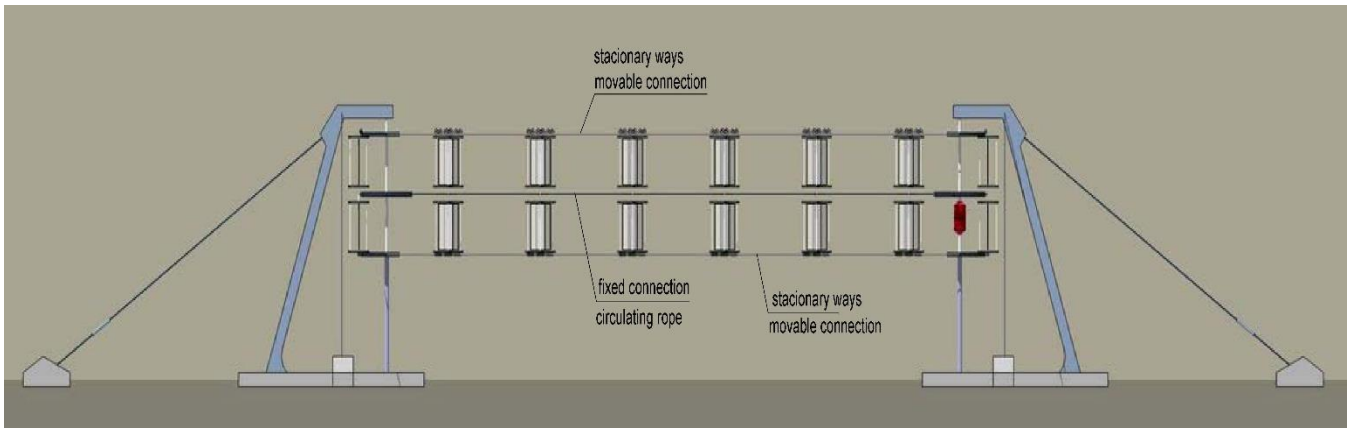

5. Construction variants of carriages

Design of six types, which differ in design.

5.1 First type - construction of the basic type of carriage 34.
5.2 Second type - construction of the basic type of carriage 54.
5.3 Third type - construction of the lamella carriage 50.
5.4 Fourth type - carriage construction 69.
5.5 Fifth type - construction of the wind carriage 12 of the box structure
5.6 Sixth type - carriage construction 13 of simple construction.

5.1 First type - construction of the basic-type carriage 34 with one main rotary plate:

schemes

carriage ground plan

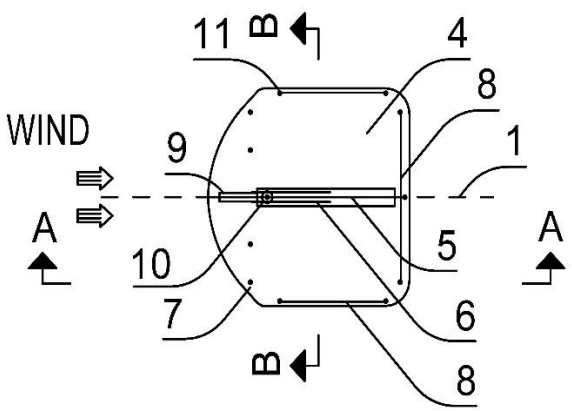

carriage ground plan

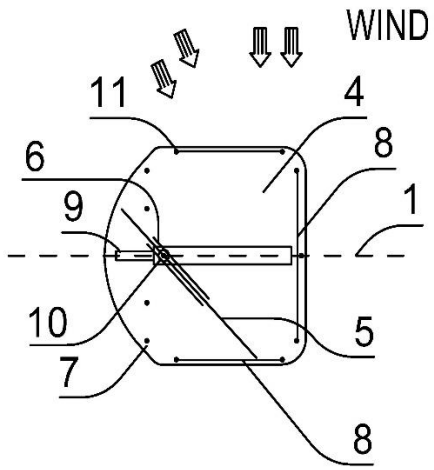

carriage ground plan

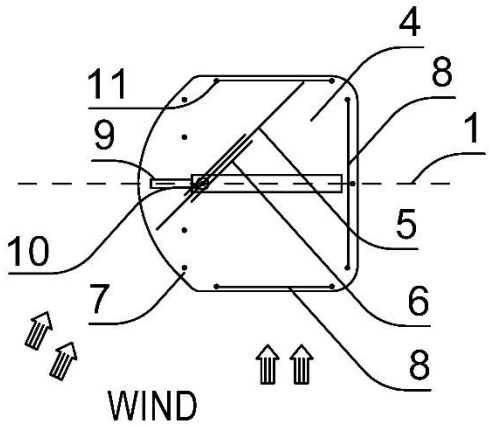

carriage ground plan

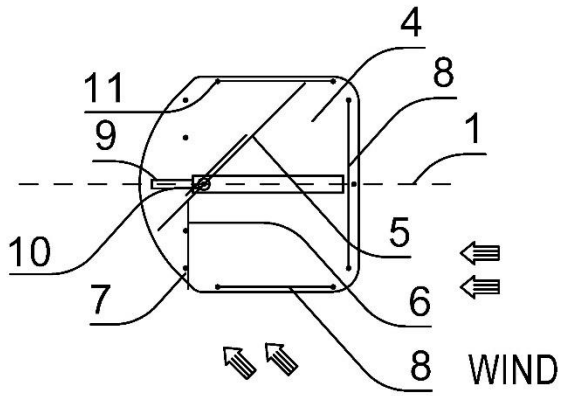

1 - circulating rope of the horizontal way

3 - upper horizontal structural plate

4 - bottom horizontal structural plate

5 - main vertical rotary plate

6 - auxiliary vertical rotary plate

7 - connecting rod of the auxiliary plate

8 - oblique reinforcement

9 - sliding mechanism

10 - shaft of rotation for the main vertical plate

11 - connecting rod of oblique reinforcement

cross section A-A

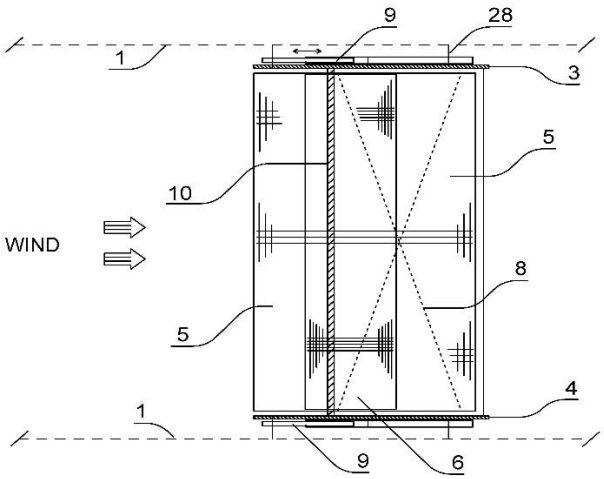

cross section B-B

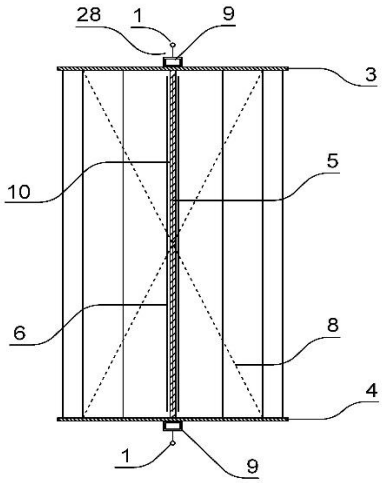

28 - fixed connection of the sliding mechanism with the rope

34 – basic-type wind carriage with one main rotary plate

axonometry of the carriage

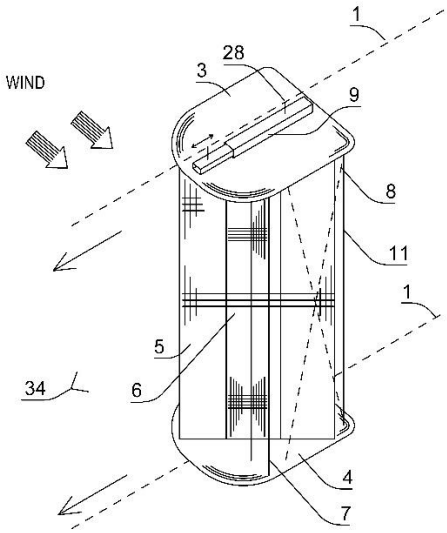

functional model from the workshop

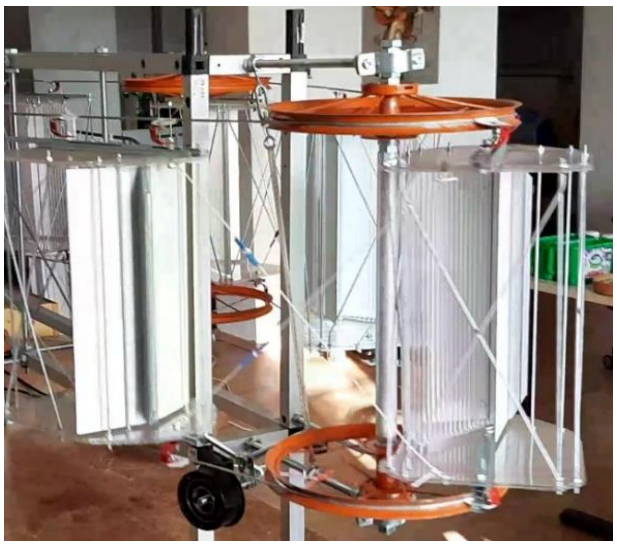

The basic element of the construction is the stabilization of two fixed horizontal plates 3, 4 located above on which the shaft of rotation 10 for the main vertical plate 5 , which is located between them, will rotate. The construction of the carriage 34 consists of a fixed stationary support part and movable rotating parts which are constructed in such a way that they are turned by the action of the wind itself. Two fixed horizontal plates placed above each other 3, 4 form the base of the carriage, which represent direct and oblique rod elements 11 hardened at all planes, thus creating a solid cage that resists all external forces and forms at the carriage 34 frame. Plates 3, 4 reinforce the structure in the horizontal direction and at the same time ensure the horizontalthe wind barrier for the vertical rotary plates 5 , 6 which do not collide with the wind when changing the direction of the carriage. The moving plates of the carriage structure 5, 6 rotate within a certain defined range of rotation around the vertical shaft of rotation 10. The vertical movable parts 5, 6 have an axis of rotation located in front of the center of gravity of the plate in the direction of movement of the carriage 34 so they can be turned by the wind from any direction by its action. The rotary plates 5, 6 are surfaces with dual function and are divided according to efficiency in different wind directions with respect to the carriage 34 and according to position on the carriage structure 34 on the main plates 5 and the secondary plates 6. The main rotary plate 5 has a function to take the force of the moving wind from the rear and side direction and to transmit it through the rod shaft of rotation 10 and the side delimiting elements 11 for the range of rotation of the main plate 5 onto the fixed stationary support part of the carriage 34. The auxiliary vertical rotary plate 6 has the function of absorbing the force from the moving wind only from the rear direction, it is fixed in articulated manner on the main plate 5 from both sides at the point of its axis of rotation and transmits the force through the main plate 5 and fixed delimiting elements 7 for the range of rotation of the side plate 6 on the fixed stationary support part of the carriage. The vertical shaft of rotation 10 of the main rotary plate is firmly attached to the lower and upper bases 3, 4. On this shaft 10 is fixed the main rotary plate 5 in approximately one third of its length which ensures its automatic rotation by the wind in the vertical plane.

The fixed parts transmit the applied wind force from the movable plates 5, 6 to the movement of the circular rope 1 fixed to the carriage 34 or to the independent movement of the carriage 34 by means of the wheels 27 along the stationary way 67 . In case of ways arrangement with linear elements below each other, this type of carriage 34 can be connected to the way by a fixed or mobile connection. With a fixed connection, the carriage 34 will be attached to the rope via sliding mechanism 9 with the help of the fixed connection 28 and in case of a wheel connection, the carriage 34 will be attached to the rope 67 by the runner 36 with a rotating wheel mechanism. The carriage 34 is connected to the track at four points, thereby stabilizing its vertical and horizontal location.

5.2 Second type - Construction of the basic-type of carriage 54 with two main vertical rotary plates:

schemes - ground plans of the carriage *54*

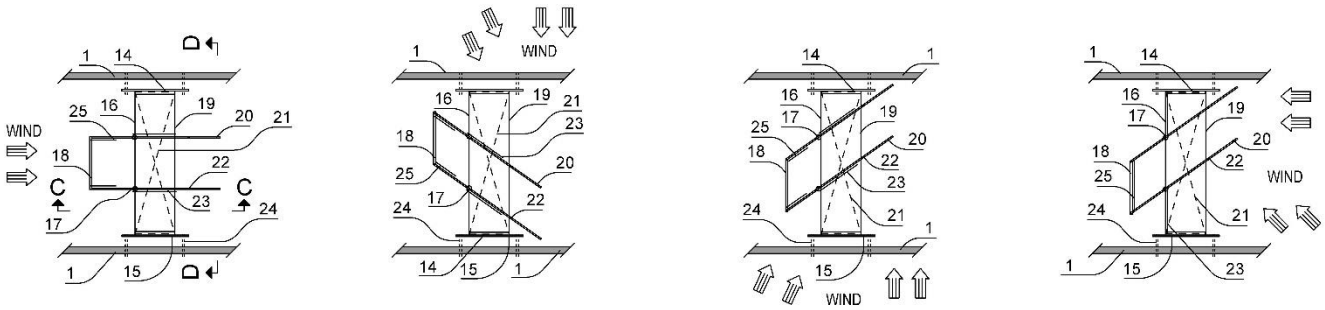

axonometry of the carriage | cross section C-C | cross section D-D

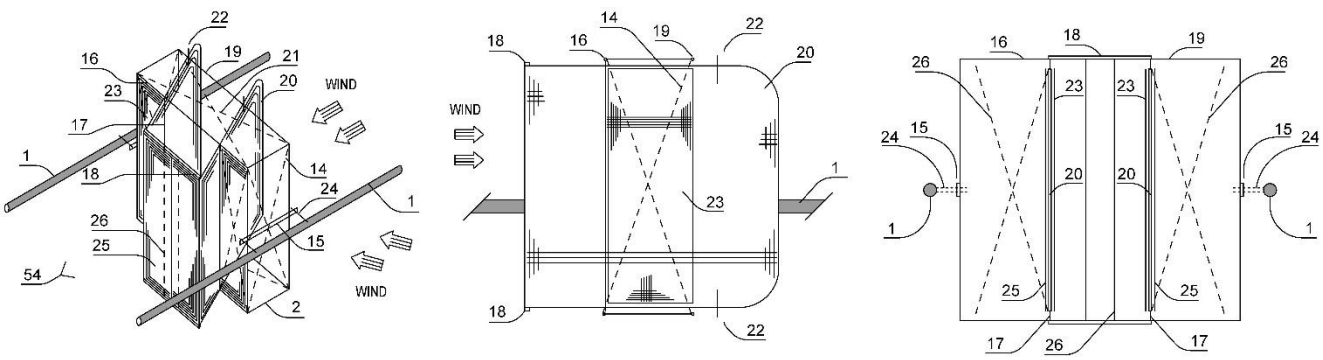

1 - circulating rope of the horizontal way *2 - cross connection of the frames* *14 - side oblique reinforcement*

15 - connecting horizontal slat of the vertical supporting structure with a sliding mechanism

16 - front supporting vertical frame *17 - shaft of rotation for the main vertical plate*

18 - front connecting horizontal slat of the main plates *19 - back supporting vertical frame*

20 - main vertical rotary plate of the carriage with several vertical rotary plates

21 - horizontal oblique reinforcement *22 – stopper limiting the movement of the main vertical plate*

23 - side auxiliary vertical rotary plate *24 - connection of the carriage to the way*

25 - front auxiliary vertical rotary plate *26 – wire strand limiting the movement of the front vertical sheet*

54 – basic-type wind carriage with two and more main vertical rotary plates

The basic element of the structure is the stabilization of two fixed vertical frames 16, 19 located behind each other perpendicularly to the direction of movement of the carriage 54. The frames 16, 19 are connected in all four corners by a transverse joint element of the frames 2 and are reinforced in both the vertical and horizontal planes, creating a rigid cage whose shape resists to all external forces and forms the frame of the carriage 54. The vertical shafts 10 of the main rotary plates 20 are firmly attached to the lower and upper parts of the front frame 16 and are placed next to each other at a reasonable distance. On these shafts 10 are installed the main rotary plates 20 approximately in one third of their length which ensures the automatic wind rotation in the vertical plane. The side auxiliary vertical rotary plates 23 are fixed in articulated manner to the main rotary plates 20 on both outer sides. On the main rotary plates 20, the front auxiliary vertical rotary plates 25 are connected in articulated manner on both inner sides. The main rotary plates 20 are connected at the top and bottom by two front connecting slats 18 which provide synchronous movement of both main rotary plates 20. The main rotary plates 20 have stoppers 22 at the ends which define their range of rotation or the range of rotation is defined by the side bars of the cage structure. Both frames 16, 19 are attached to the circulating ropes 1 by a connecting horizontal bar on both sides in the middle of the vertical parts of the frame. In case of the ways arrangement with line elements next to each other, this type of carriage 54 can be connected to the way by a fixed or movable connection. With the fixed connection, the carriage will be attached to the rope via sliding mechanism 15 and in case of the wheel connection the carriage 54 will be fixed to the rope 1 by the connecting bar 90 and the runner 36 with a rotating wheel mechanism.

functional model from the workshop

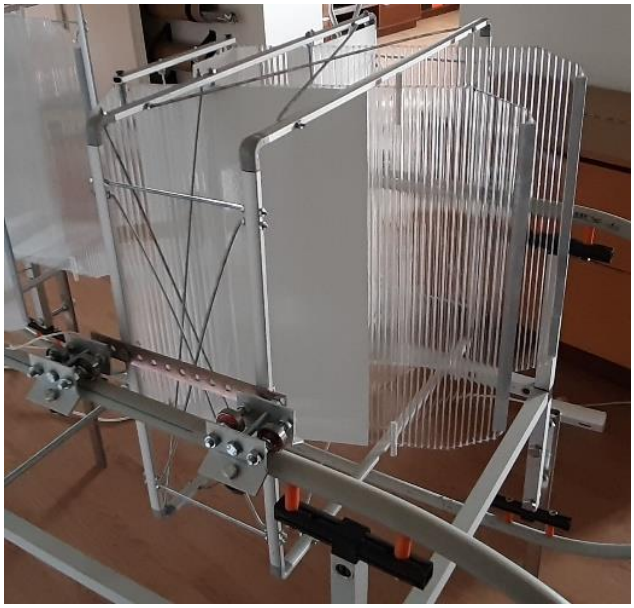

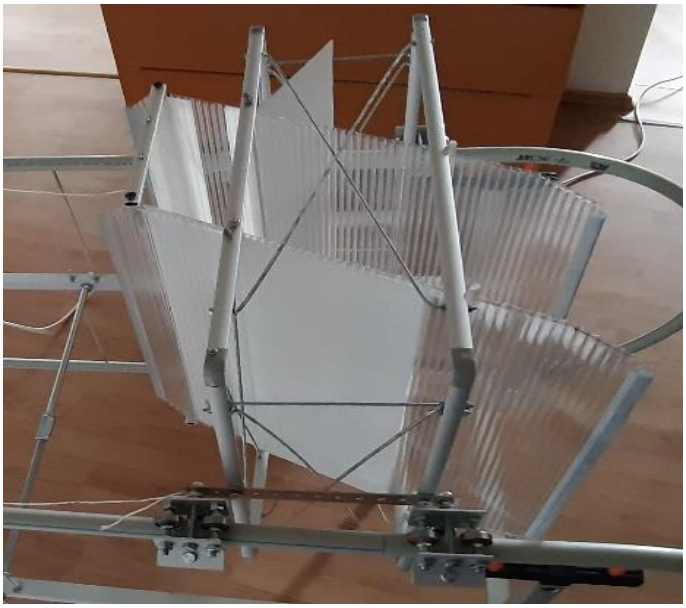

The following figure shows the wind cable car device with a guideway with circulating ropes 1 arranged next to each other which consists of four basic components, which are: supporting structure of masts 31, vertically oriented pulleys 30, the ropeway with circulating ropes 1 and carriages 54. Pulleys 30 are mounted in articulated manner to at least two masts 31 on which two circulating ropes 1 are threaded and arranged next to each other in the form of a vertical closed loop. To compensate for deflection from the side wind forces, guide wheels 32 will be used.

way scheme

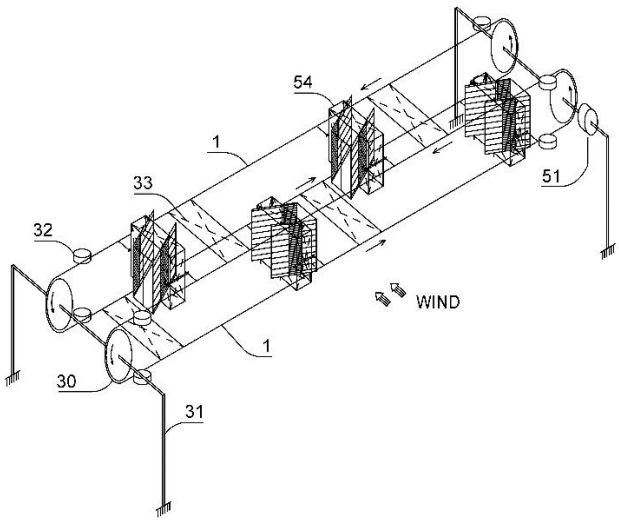

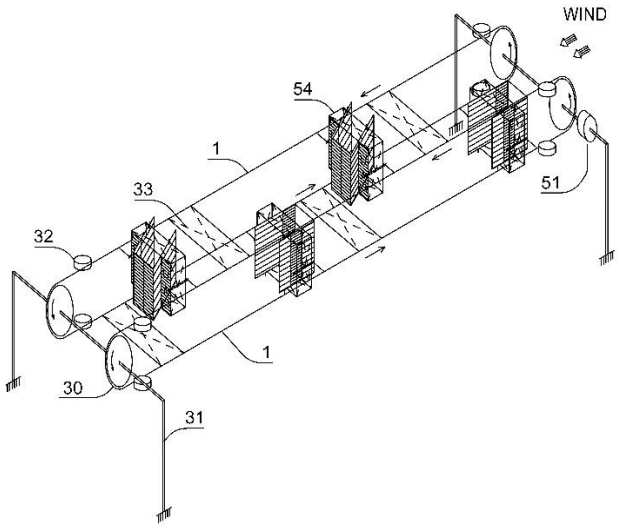

1 - circulating rope of the horizontal way

30 - pulley of the movable rope

31 - mast of the wind cable car

32 - guide wheel of the horizontal movable rope to the pulley

33 - reinforcement of the uniform movement of a pair of ropes

51 - electric energy generator

54 – basic-type wind carriage with two and more main vertical rotary plates

The description of the design of wind carriages in the previous two paragraphs in this article characterizes its simplest basic type. The wind carriages can be structurally assembled from several repetitive rotating parts of the carriage 34 and 54 and the variability of the construction is very large. The wind carriages 34 and 54 may have several main and auxiliary rotary plates 5 and 6 arranged next to each other or behind each other which lowers the need for large-dimension rotating parts. Large wind carriages can also be constructed in this way with more energy from the wind.

5.3. Third type - the construction of the V-type wind carriage 50 , which is a combination of the type of carriage of the V-shaped construction and the type of carriage with a vertical rotary plate:

carriage 50 pictures

schemes - ground plan of the carriage slat detail axonometry of the carriage

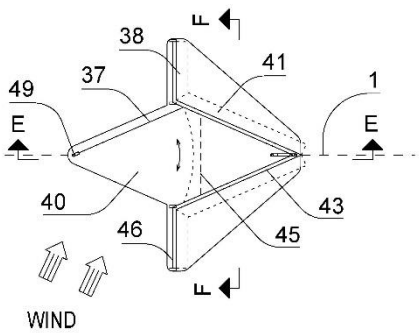

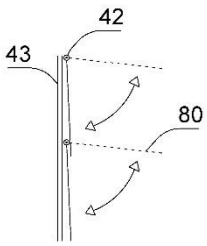

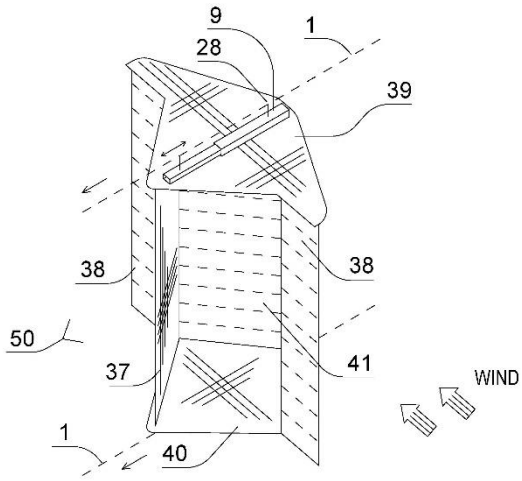

cross section E-E	cross section F-F

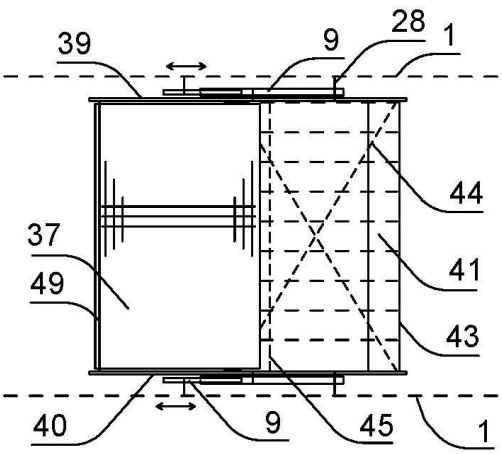

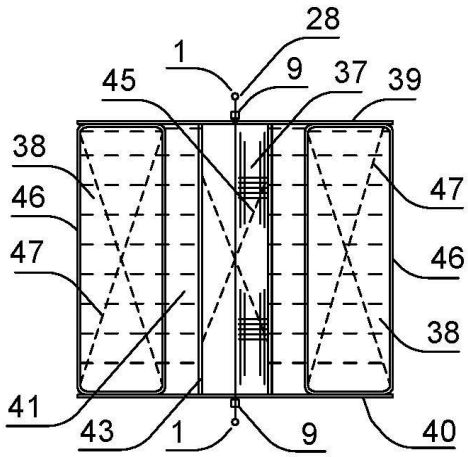

1 - circulating rope of the horizontal way

9 - sliding mechanism

28 - fixed connection of the sliding mechanism with the rope

37 - vertical rotary plate of a V-type carriage with a main rotary plate

38 - side transverse slant wall

39 - upper horizontal structural plate of a V-type carriage with a main rotary plate

40 - bottom horizontal structural plate of a V-type carriage with a main rotary plate

41- back oblique slat wall

42 - horizontal axes of the slat rotation

43 - supporting structure of the slat sheets

44 - oblique reinforcement of the slat sheets

45 - transverse reinforcement of the carriage structure

46 - structural frame of the side slat wall

47 - oblique reinforcement of the side slat wall

49 - shaft of the vertical rotary sheet

50 - V-type wind carriage with a main rotary plate

80 - slat

Each carriage 50 is fixedly connected to the circulating ropes 1 arranged one below the other at two points on each circulating rope 1 by the sliding mechanism 9 and fixed connection 28. The sliding mechanism 9 is mounted on the upper and a lower horizontal plate 39 and 40, between which are mounted vertical slat walls 38 and 41 formed of horizontal tilting slat 80 mounted on the supporting structure 43 and the side structural frames 46. These slat walls have a V-shaped ground plan, with the acute angle of the V facing backwards. On both ends of the V shape, side transverse slat walls 38 are mounted in the direction perpendicular to the way. In the front part of the carriage, the vertical rotary plate 37 is mounted on the horizontal plates 39 and 40. The supporting structure of the slat sheets 43 and the structural frame of the side slat wall 46 is reinforced by oblique reinforcement 44, 45 and 47 of these slat walls. In this manner, the resistance surfaces form slat walls 38 and 41 formed of slats 80 where the slats 80 are able to let wind from the front direction and prevent air from flowing from the back. The slats 80 are constructed in a horizontal direction and they are open upwards. The V-shaped walls cause the carriage 50 to move in both side wind directions on the path of the carriages 50 forward. An improved design variant of making the wind carriages 50 is a combination of construction elements of the slat V systems with the main vertical rotary plate 37 where in the case of side wind the plate moves the whole carriage forward. If the wind blows from behind on the track, then all the slats are closed and the force of the wind is transmitted to the movementof the circulating rope 1 over all fixed structural elements of the carriage 50. The carriages 50 are mounted on stationary ways on the rope or cable 67 in a movable manner by means of the runner 36 with the rotating wheel mechanism. The carriage 50 is connected to the way at four points, thus stabilizing its vertical and horizontal position. The turning of the carriage when changing the length between two connection points on a straight section and changing the length of two connection points in an arc to the way at the moment of rotation is solved by the rotating mechanism of the wheel connection.

functional model from the workshop

Way with this type of carriages - see section - Design variants of ways - 1st moving way with circulating ropes and firmly rope-connected carriages where the ropes are arranged below each other.

5.4. Fourth type - construction of carriage 69 with a tilting horizontal plate round the horizontal axis:

carriage 69 pictures

schemes - ground plan of the carriage cross section H-H axonometry of the carriage

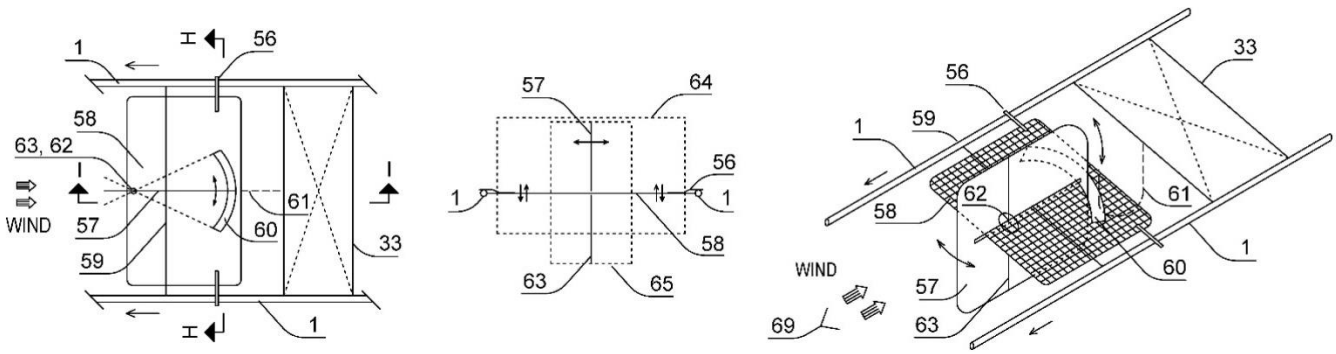

cross section I-I side view

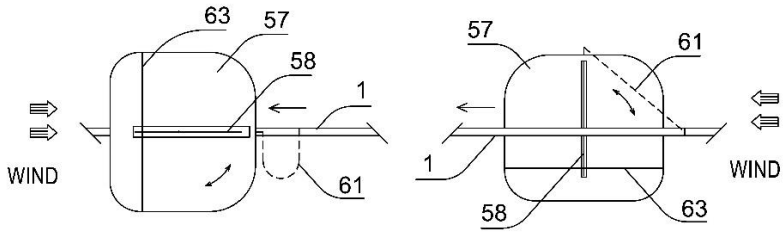

1 *- circulating rope of the horizontal way* ***33*** *- reinforcement of the uniform movement of a pair of ropes*

56 *- stopper of the rotary movement of the carriage supporting plate* ***57*** *- vertical rotary plate*

58 *- supporting rotary plate* ***59*** *- shaft of rotation for the supporting plate*

60 *- cut-out in the supporting plate allowing the rotation of the vertical within a limited range*

61 *– wind strand defining the movement range of the supporting plate to a vertical position*

***62 -** bearing in which the axis of the vertical plate rotates round the supporting plate*

***63 -** shaft of the vertical rotary plate of the carriage with a tilting horizontal plate round the horizontal axis*

***64 -** profile of the supporting plate in a tilted position at the rear wind*

***65 -** profile of the vertical rotary plate in a tilted position at the rear and side winds*

***69 -** wind carriage with a tilting horizontal plate round the horizontal axis*

Another example of the construction of the wind carriage is the carriage 69 with a tilting plate of the supporting plate 58 in the rear wind round the horizontal shaft of rotation 59 in combination with the main vertical rotary 57 described in the basic-type wind carriage 34. Such a carriage structure 69 is suitable for installation on ways with linear elements arranged next to each other with a fixed connection to the moving way. The shaft of rotation for the supporting plate 59 in the horizontal direction is perpendicular to the direction of travel of the carriages 69. The basic feature of the construction is the movable connection of two rotating plates 57 and 58 perpendicular to each other provided with cut-outs so that they fit into each other and so that the main vertical rotary plate 57 could rotate sideways along the supporting plate 58 . This is made possible by the bearing 62 built into both plates. The rotational position of the supporting plate 58 is defined in the upper position by the cable 61 and in the lower position by the stopper 56. The rotational position of the main vertical plate 57 is defined by the cutout in the supporting plate 58. The main vertical plate 58 has the cutout in the middle of the plate. For the rear wind, the carriage 69 functions so that the supporting plate 58 is tilted by the influence of the wind to the vertical position together with the main plate 57 and the wind pushes the carriage forward. The main vertical plate 57 rotates obliquely to the side wind and pushes the carriage forward. Both plates 57 and 58 are turned to the front wind longitudinally in the wind direction and offer only minimal frontal resistance. The carriage 69 is connected to the way with linear elements arranged next to each other at two points, thus stabilizing its horizontal position. The vertical movement of the whole carriage is defined by the stoppers 56 resting on the ropes 1 of the moving way and the cable 61 attached to the plate 58.

functional model from the workshop *the carriage model is attached in this case to the supporting frame*

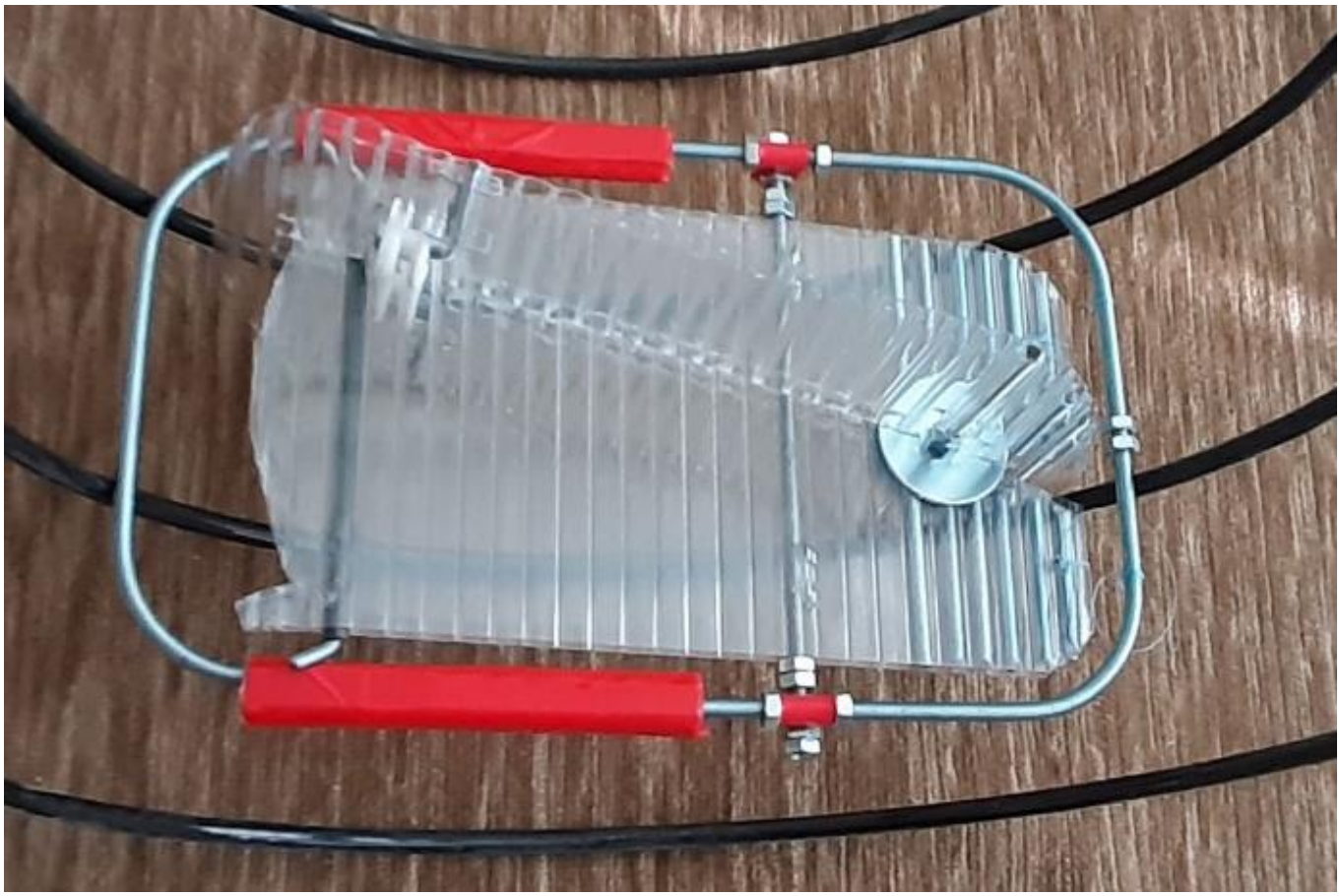

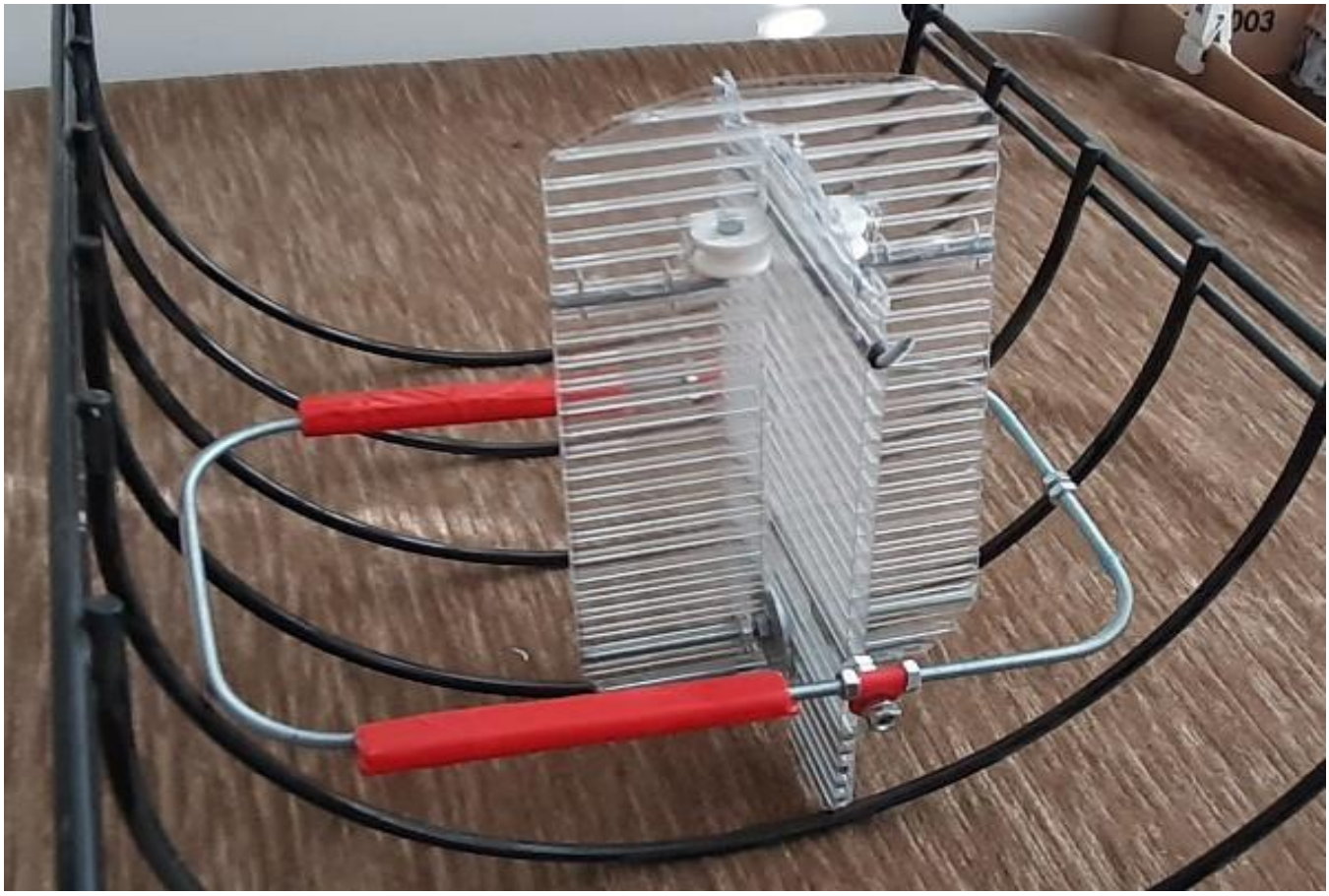

1. Way with this type of carriage - see section - Design variants of ways - 2. Movable way with circulating ropes and rope-fixed carriages where the ropes are arranged next to each other.

5.5 Fifth type - construction of the wind carriage 12 of the box structure:

carriage 12 pictures

schemes - ground plan of the carriage ground plan of the carriage axonometry of the carriage

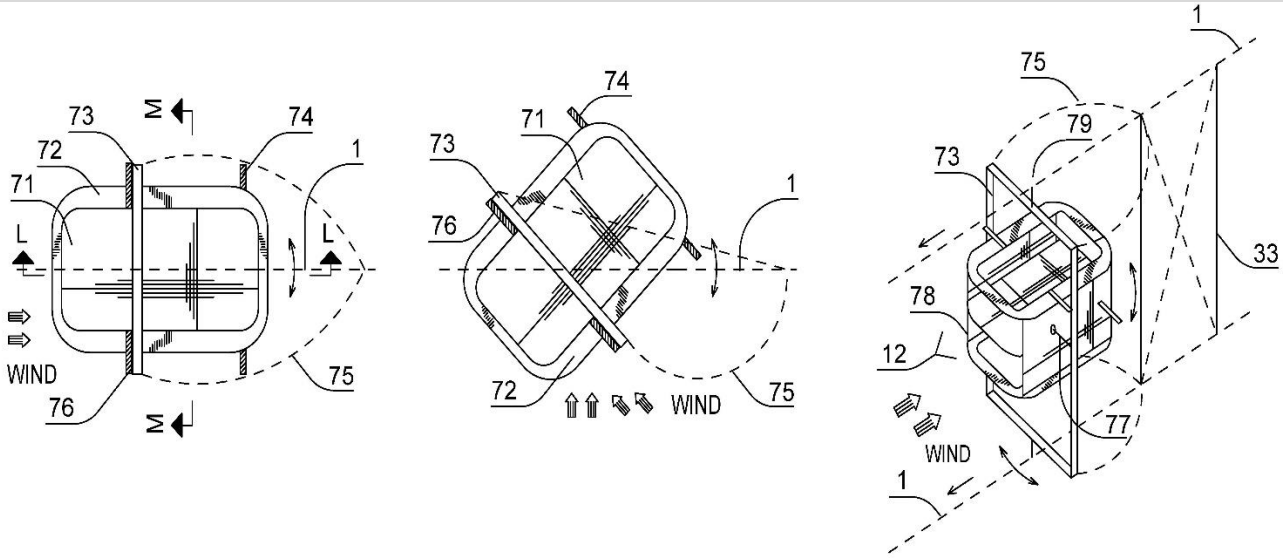

cross section M-M	cross section L-L	side view

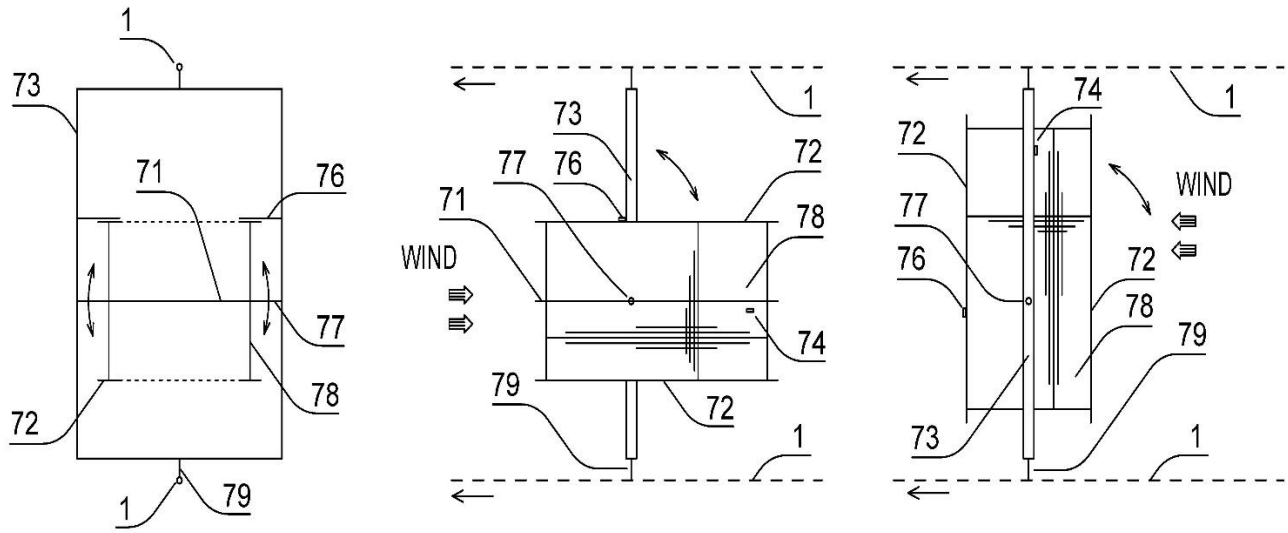

1 *- circulating rope of the horizontal way*

12 *- wind carriage of a box structure type*

33 *- reinforcement of the uniform movement of a pair of ropes*

56 *- stopper of the rotary movement of the carriage supporting plate*

57 *- vertical rotary plate*

58 *- supporting rotary plate*

59 *- shaft of rotation for the supporting plate*

60 *- cut-out in the supporting plate allowing the rotation of the vertical plate within a limited range*

61 *- wire strand defining the movement range of the supporting plate to a vertical position*

62 *- bearing in which the axis of the vertical plate rotates round the supporting plate*

63 *- shaft of the vertical rotary plate of the carriage with a tilting horizontal plate round the horizontal axis*

64 *- profile of the supporting plate in a tilted position at the rear wind*

65 *- profile of the vertical rotary plate in a tilted position at the rear and side winds*

69 *- wind carriage with a tilting horizontal plate round the horizontal axis*

Such a construction of the carriage 12 can be installed on ways with ropes 1 arranged below each other with a fixed connection 79 which, however, is rotatable in the horizontal plane into a movable path. The basic characteristic of the construction is the vertical frame 73 fixed to the ropes 1 in the direction perpendicular to the movement of the carriage 12 on which through the horizontal shaft 77 in the middle of the vertical part of the frame 73 the tilting box structure is attached. The tilting box structure in the transverse section is in the form of the letter H. Between the two vertical walls 78 there is a central plate 71 in a fixed connection with the vertical walls 78. The box structure has no rotating sheets. The horizontal shaft of rotation of the horizontal shaft 77 is firmly connected to the central plate 71. At the ends of the vertical walls 78 are the bottom and top edges of the structure flange 72 which increases the rigidity of the structure and the surfaces of this structure flange 72 are parallel to the central plate 71. The edge of the structure flange 72 extends around and connects the vertical walls 78 at the top and bottom. There are two couples of stoppers 76 and 74 on the box that define the allowable movement of the entire box. In the rear wind, the carriage works so that the box tilts to the vertical position due to the wind, the central plate 71 puts the necessary resistance to the wind and the wind pushes the carriage towards the front. In case of side winds, the whole box rotates horizontally at an angle to the wind by rotating the entire frame 73 at the point of connection of the frame 73 to the rope 1 while both vertical walls 78 provide the necessary resistance to the wind and push the carriage forward. The rotation is corrected by the cables 75 in the upper and lower part of the frame 73 which connect the frame 73 and the circulating ropes 1. Both the vertical plates 78 and the center plate 71 are automatically oriented longitudinally in the direction of the wind and put only minimal frontal resistance. This is ensured by moving the horizontal shaft of rotation 77 to the front carriage. Uniform rotation in the vertical direction is ensured by the greater weight of the front part of the carriage 12.

functional model from the workshop
the *model of the carriage is suspended in this case via the supporting frame without connection to the ropes*

the wind blows from the side

the wind blows from the side

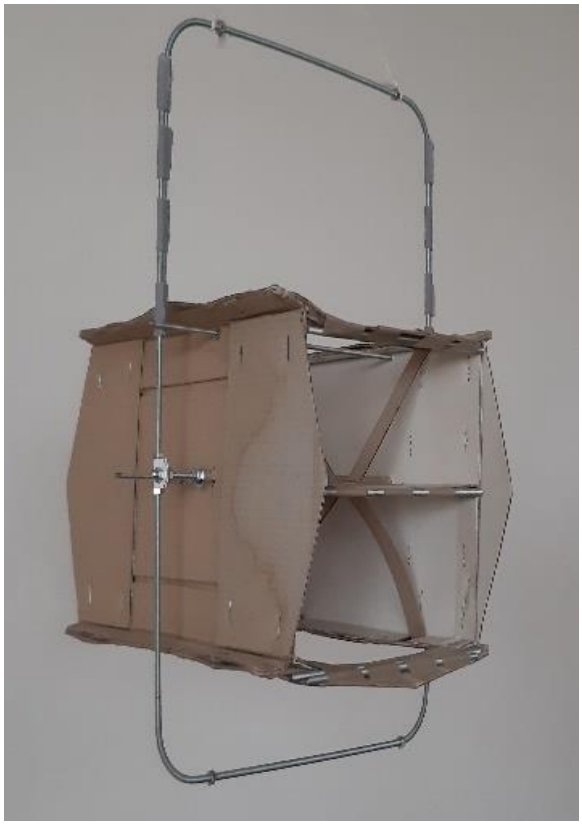

the wind blows from the front

the wind blows from behind

5.6 Sixth type - construction of carriage 13 of simple construction:

schemes - ground plans of the carriage

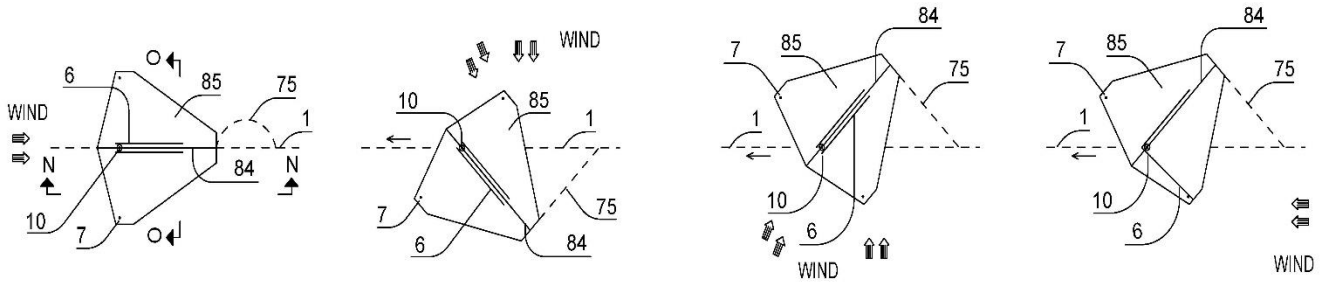

axonometry of the carriage | cross section N-N | cross section O-O

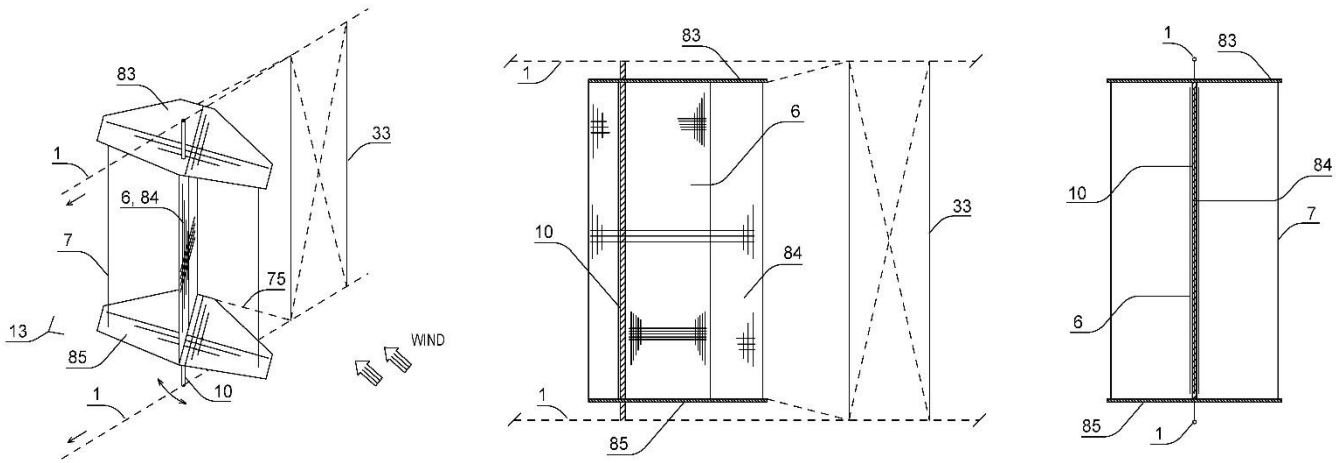

1 *- circulating rope of the horizontal way*

6 *- auxiliary vertical rotary plate*

7 *- connecting rod of the auxiliary plate*

10 *- shaft of rotation for the main vertical plate*

13 *- wind carriage of a simple structure type*

33 *- reinforcement of the uniform movement of a pair of ropes*

75 *- wire strand defining the movement range in the horizontal plane*

83 *- upper horizontal structural rotary plate of the simple-structure carriage*

84 *- vertical structural rotary plate of the simple-structure carriage*

85 *- bottom horizontal structural rotary plate of the simple-structure carriage*

This type of carriage 13 is similar to the basic type of carriage 34 with one main rotary plate, but it has a simplified construction in that the main rotary plate 84 is firmly connected to the upper and lower structural plate 83 and 85. When the carriage 13 is rotated in the rear and side winds, the upper and lower plates 83 and 85 also rotate. The second simplification consists in the fact that the pivotal connection to each rope 1 is only at one point, namely at the point of the shaft of rotation 10, the delimitation of the range of rotation of the carriage 13 being provided by the cable 75 between the wind carriage 13 and circulating rope 1. In this case, there is no problem with turning the carriage, as is the case with the handle on each rope at two points in terms of unequal length between the two handles in the straight and rotational sections.

The auxiliary rotary plate 6 from one side and the other is connected to the main rotary plate 84 in articulated manner. By firmly connecting the plates perpendicularly to each other, rigid structure is created without the need for additional reinforcements elements. On both sides of the carriage 13 there is one connecting rod 7 which prevents the auxiliary rotary plate 6 in the undesired range of motion and in the rear wind transmits the force from the side plate 6 to the lower and upper horizontal construction plate 83 and 85. This type of carriage 13 is suitable to be installed on ways with ropes 1 arranged below each other with the fixed connection to the moving way.

functional model from the workshop


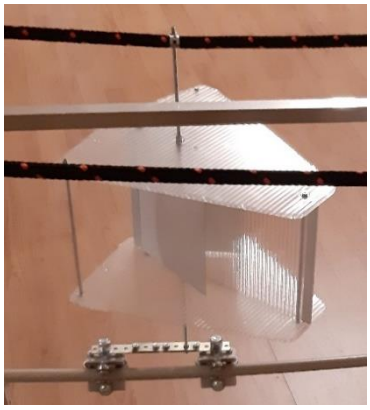


6. Design solutions and ensuring the operation of the wind-loaded cable car on different types of wind cable car ways.

In the industrial use, it is suitable for the wind cable car to have a bigger way length and there is a need to solve unequal length of the ropes due to the created deflections of the track. The wind cable cars which are mounted on two ropes must have the following conditions for their proper function when moving along the way of the wind cable car:

- When rotating the carriage round the pulleys, the upper and lower connection points must rotate at the same time, the carriage is in a perpendicular position to the ropes and one rope does not overtake the other, which implies the requirement of the parallel movement of both ropes. Because two ropes of exactly the same length can never be made, it is necessary to correct the movement of the ropes. The unequal length of the ropes is also caused by the vertical deflection from the actual weight of the carts and ropes and a lateral deflection from the side wind force. Deflections of ropes must always be solved only in the direction perpendicular to the circlepulley, which causes unequal lengths, because in the second direction parallel to the pulley circle, the ropes extend by the same length.
- It is recommended that the carriage is designed and positioned so that all forces acting on the carriage are symmetrical with respect to the pair of ropes and so that there is no twisting. If such a twist occurs, it will be eliminated by a pair of axles of a fixed track castor.

<u>The uneven length of ropes from the production point of view is solved by:</u>

a) the mutual cross-interconnection of a pair of ropes by means of a structure of reinforcement of uniform movement rope. The cross-interconnection does not allow one rope to overtake the other and the ropes behave like a continuous belt.

axonometry

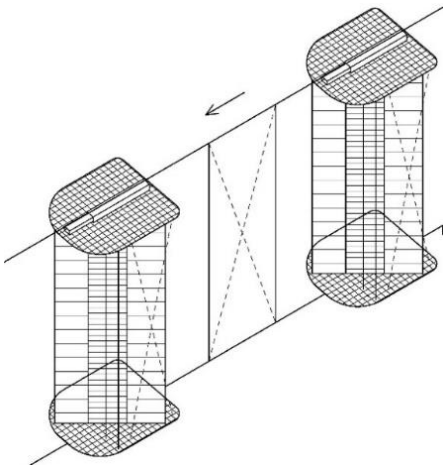

b) using a pair of connected ropes with connecting elements close to each other which will fulfill the function of chains. The conical shape of the teeth ensures small shifts of the rope to the correct position.

toothed pulley - view	toothed pulley - ground plan

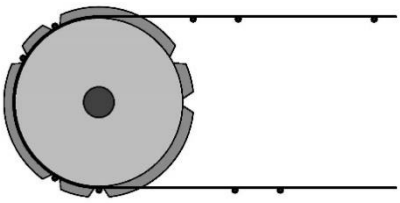

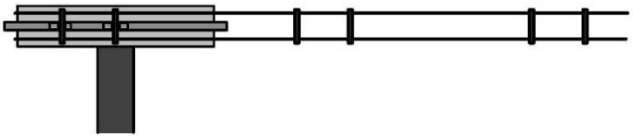

In both methods **a)** and **b)** it is necessary to use one pair of toothed pulleys firmly connected to the axle and connect the second pair of pulleys to the axle via bearings, thus ensuring their mutual rotation, in which the slip from unequal lengths of ropes is produced.

c) Chains and toothed belts may be used for shorter distances.

d) The most advantageous solution in terms of structural simplicity of the wind cable car solution is a combination of ropes so that only one movable rope and one or more stationary ropes are used. In that case, the problem of parallelism of two ropes and the problem of unequal length of moving ropes will be eliminated.

e) Another solution is to use only one rope instead of two loops. On one side there is the fixed pair of pulleys with energy consumption and on the other hand the turn is designed so that the trucks will be detachable from the circulating rope and rotate on fixed rails, the rope behind the turn being raised from the upper position to the lower position and vice versa, thus ensuring that the upper and lower ropes have the same speed. The length of the upper and lower way where the carriages move must be identical.

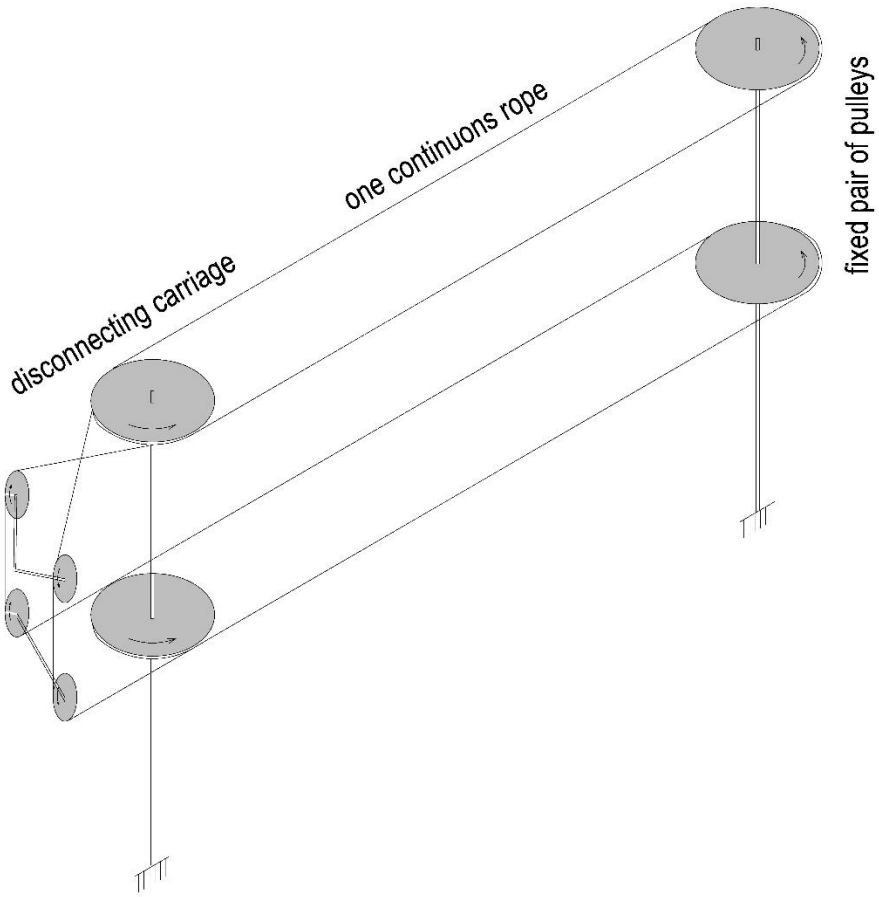

Solution of the parallelism of the ropes and the created deflections of the ropes when the cable car is loaded from the wind and its own weight in various construction variants of the ways divided into groups

The first group -  in case of a moving way with circulating ropes and rigidly rope-attached carriages where the ropes with two closed loops are arranged below each other.

- Load and deflection formed from the wind in the horizontal direction do not matter, because both ropes are tensioned simultaneously - eliminate the amount of deflection by spreading with horizontal pulleys in the middle of the track.
- For this type of way are suitable the carriage types marked in this material under numbers 34, 50 ,12 and 13.

I hereby propose the following solutions:

a) The load and the occurrence of deflection from its own weight should be solved by a supporting structure in the middle of the way so that concave and the convex curves of the track are of the same length while both ropes coming to the rotating pulleys must be in such a position and direction that they bring the carriage to the pulleys at the same time by the two points of attachment of the carriage and ropes. The total length of the rope remains the same and only the lengths of the ropes in the individual sections of the carriage change which is caused by the weight of the wind cable car itself and the shape of the carriage. The rope carriage connections must be able to slide in the vertical direction and at the same time the point of attachment to the rope must be realized by a joint.

side view

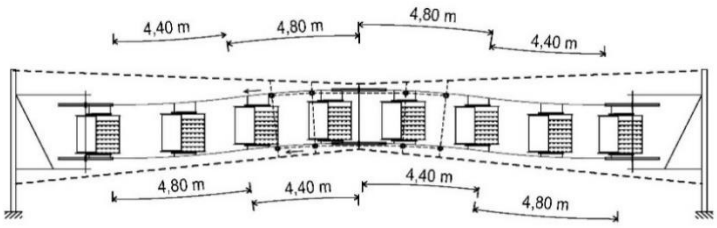

cross section of the support rollers

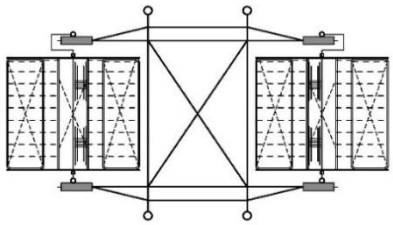

ground plan

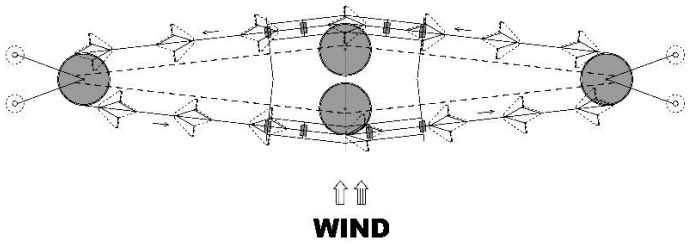

cross section through the center pulleys

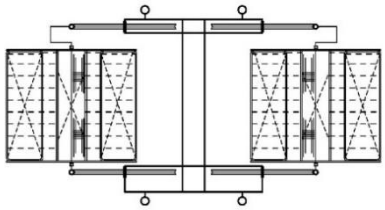

b) The lower rope will move in the horizontal plane by means of the secondary support mechanism, for example wheels or cylinders.

side view

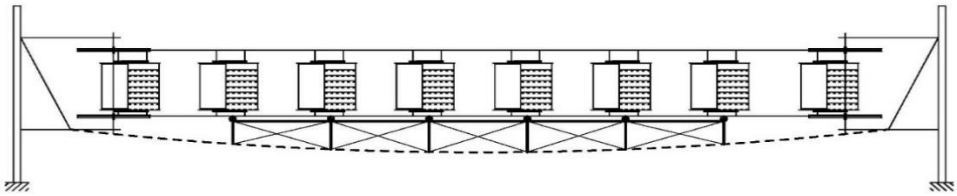

c) In the case of a way with two opposite rotations, both axes of the pulleys will be inclined at an angle perpendicular to the deflection of the rope from the weight of the wind cable car itself. Due to this tilt, the bottom rope in the picture in the side view will have a greater length, because the upper pulleys are closer to each other than the lower pulleys. In order that both ropes are of the same length and the carriages spin around the pulleys at once, the upper rope will be in the horizontal plane to describe a wavy line to ensure that both ropes are of the same length. The carriage will deviate during its movement from the vertical axis once to one side and then the other.

side view

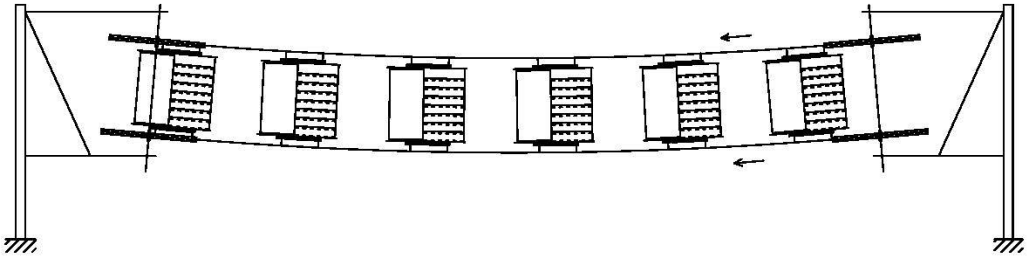

ground plan - the course of the upper rope

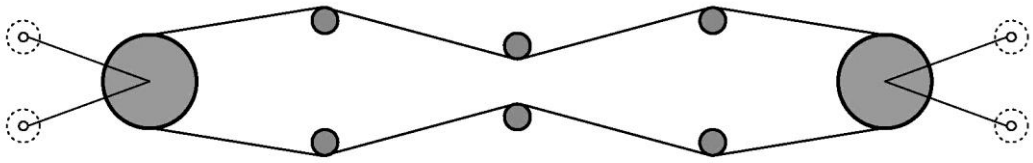

ground plan - the course of the lower rope

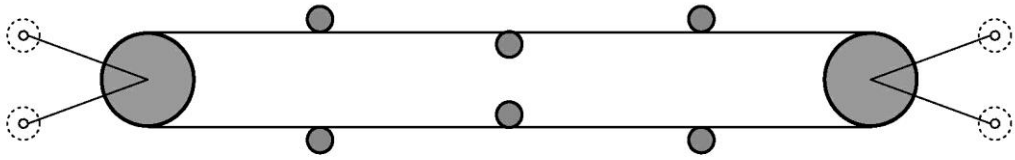

d) The upper and lower ropes will have exactly the same shape and length in each section of the way. Before the pulleys, supporting wheels will be located on both the upper and lower ropes to ensure that that they bring the carriage to the pulleys at the same time by both points of connection of the carriage and the rope. The connections of the carriages to the rope must be able to slide in the vertical direction and at the same time the point of attachment to the rope must be made in form of a joint.

side view

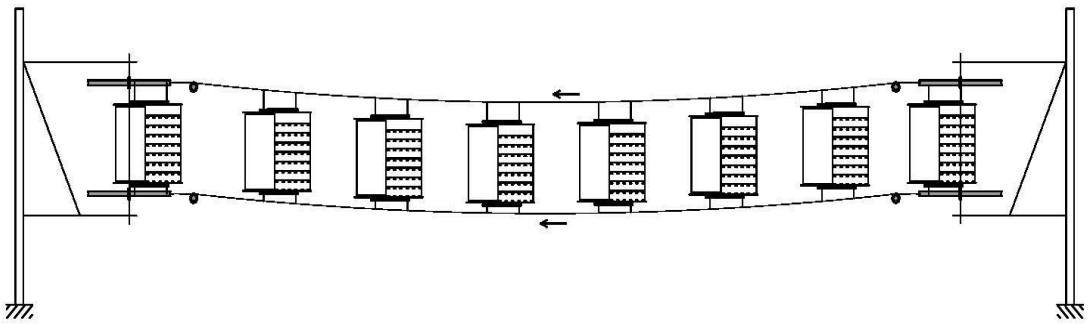

Second group - 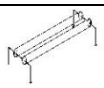 in case of a moving way with circulating ropes and rope-fixed carriages where ropes with two closed loops are arranged next to each other.

- The vertical deflection from its own weight does not matter, because both ropes are tensioned simultaneously.
- For this type of track, the suitable truck types are marked in this material under numbers 54 and 69.

I hereby propose the following solutions:

a) The right and left ropes will have exactly the same shape and length in each section of the way. Before the pulleys, supporting wheels will be located on both the upper and lower ropes to ensure that that they bring the carriage to the pulleys at the same time by both points of connection of the carriage and the rope. The connections of the carriages to the rope must be able to slide in the vertical direction and at the same time the point of attachment to the rope must be made in form of a joint.

ground plan

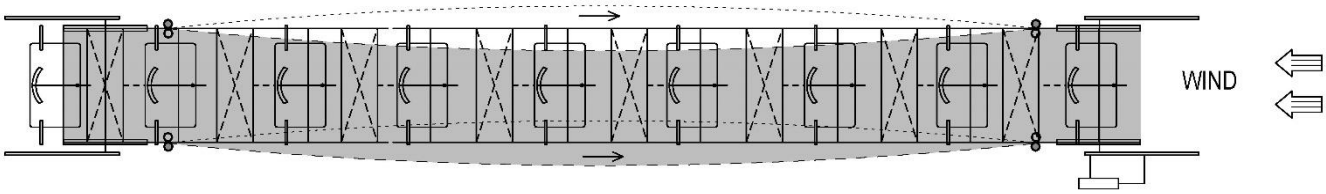

b) Loads and deflections in the horizontal direction from the wind must be eliminated by inserting a fixed stabilized stationary slat to the center of the pair of carriages on which the carriages will rest in a movable connection.

side view

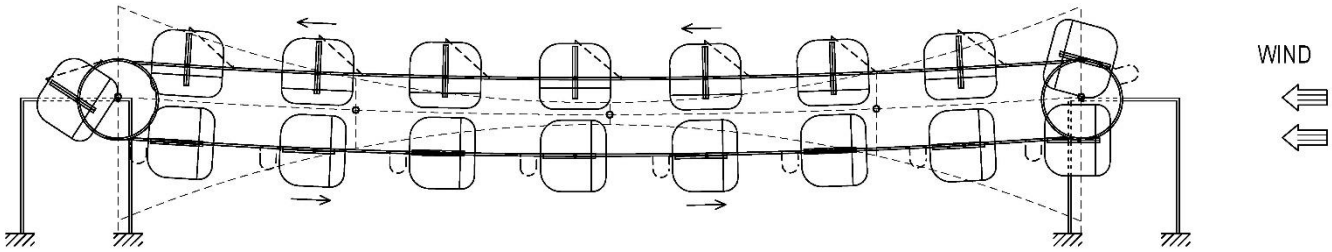

ground plan

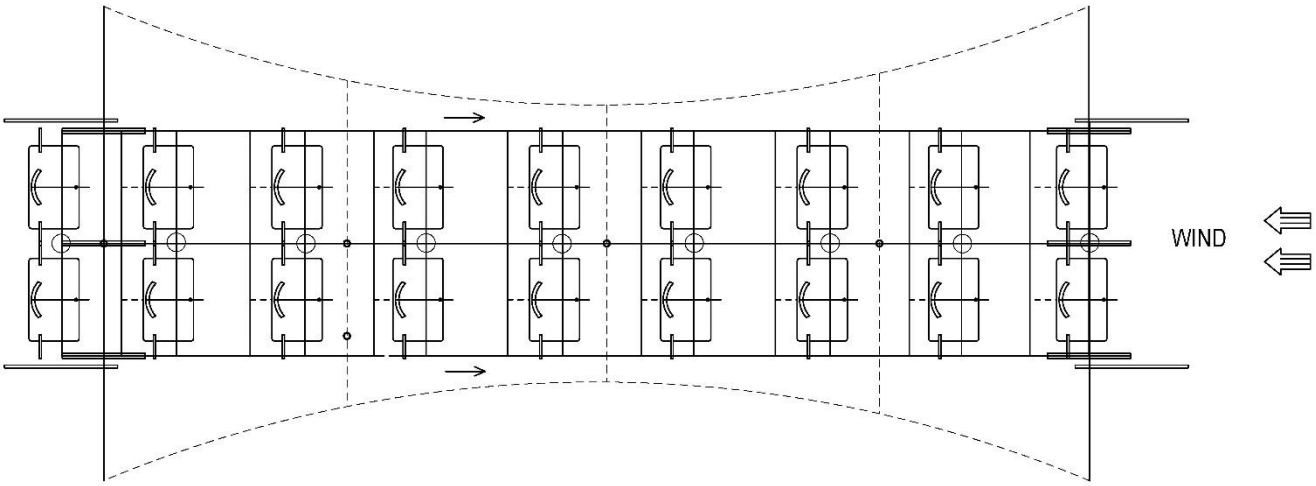

The third group - 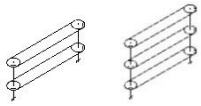 in case of a stationary way with movably rope-attached carriages where ropes with two or three closed loops are arranged below each other.

- The formation of deflections does not matter, but the rigidity of the stationary track - the ropes should be constructed so that the resulting verticalthe bend was in a sufficient distance from the horizontal curves of the way.

- In the case of an arrangement with two loops, it is necessary to ensure the consumption of energy from the moving ways by a method other than the rope, for example by an inductive linear method.

- When arranging with three loops, place the circulating rope in the middle of the carriages.

I hereby suggest the following solution:

axonometry

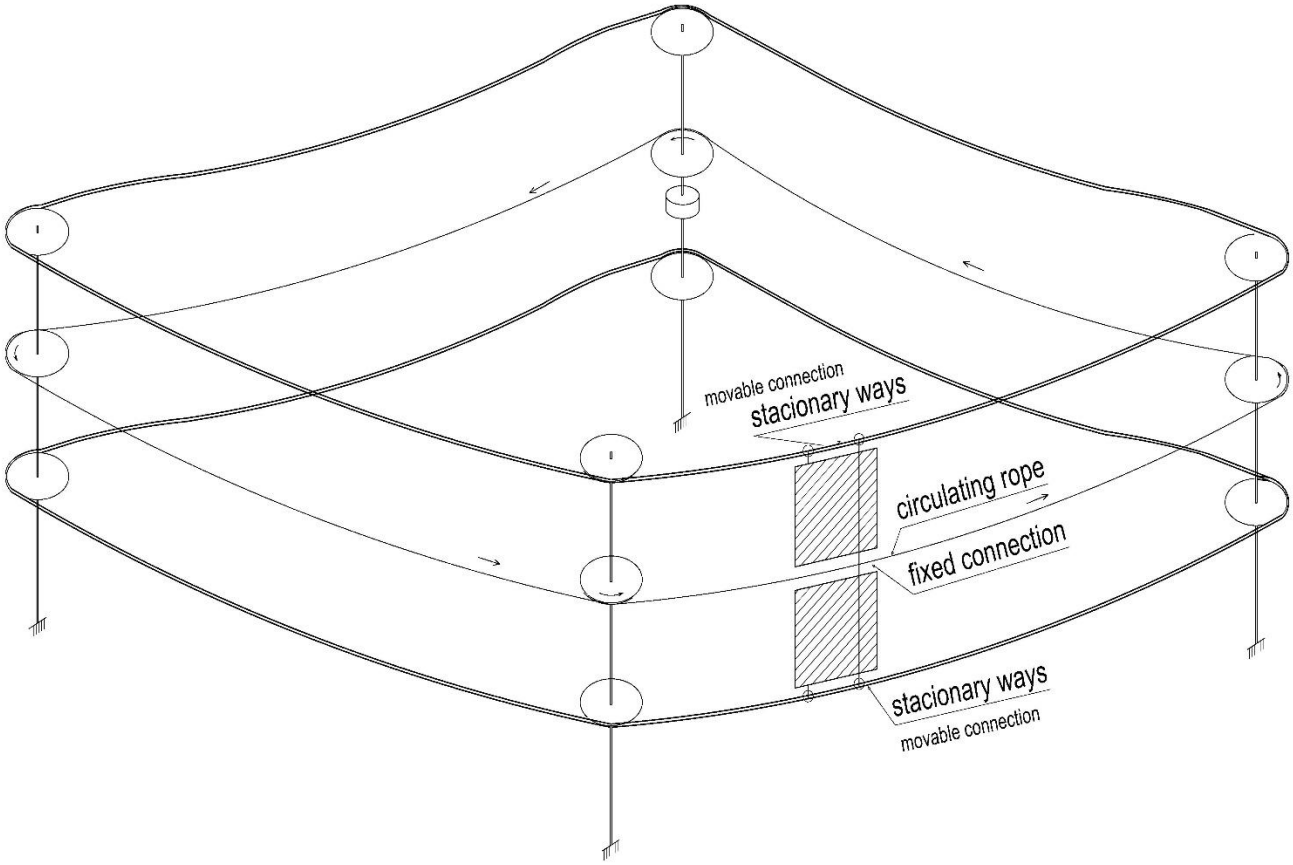

The fourth group - 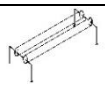 in case of a stationary way with movably rope-attached carriages where ropes with two closed loops are arranged next to each other.

- The vertical deflection from the weight itself does not matter, because both ropes are tensioned simultaneously.
- Solve the load and the occurrence of deflection in the horizontal direction from the wind by turning the pulleys and guide the circulating rope in the middle of the carriages.

side view

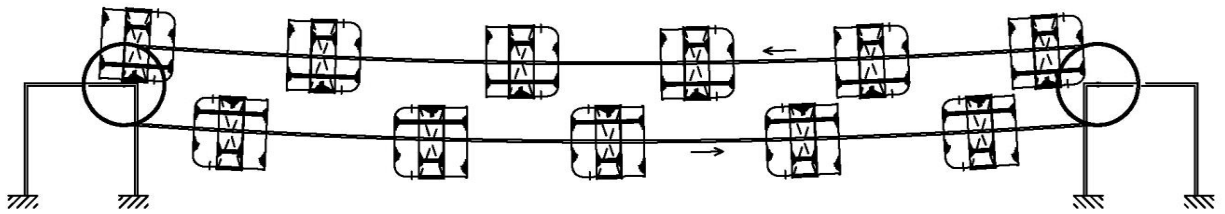

ground plan

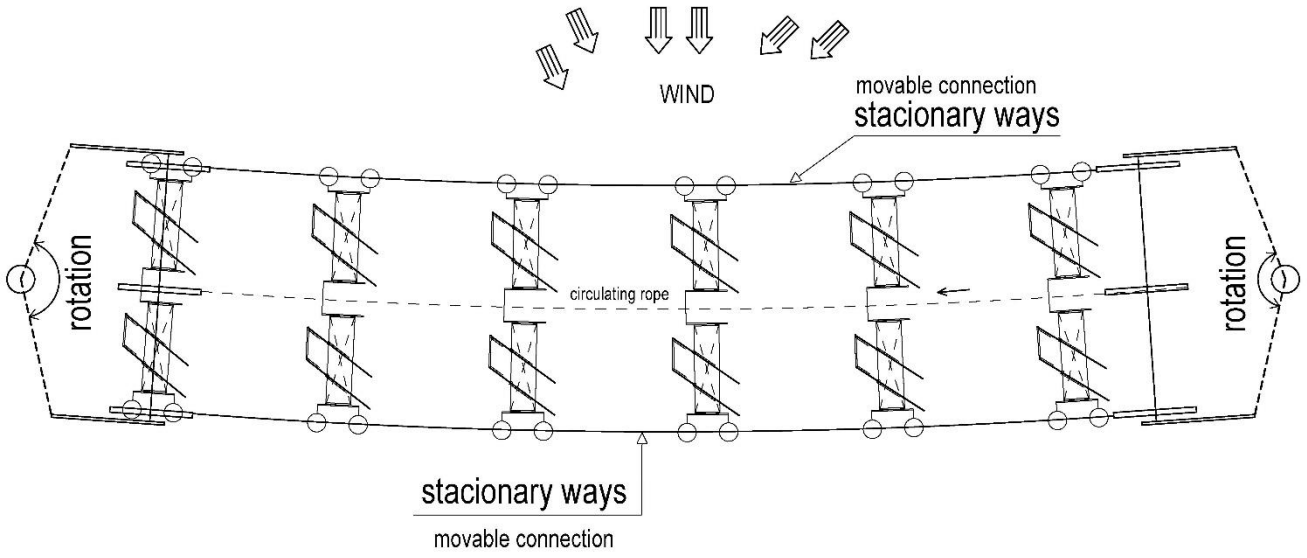

ground plan

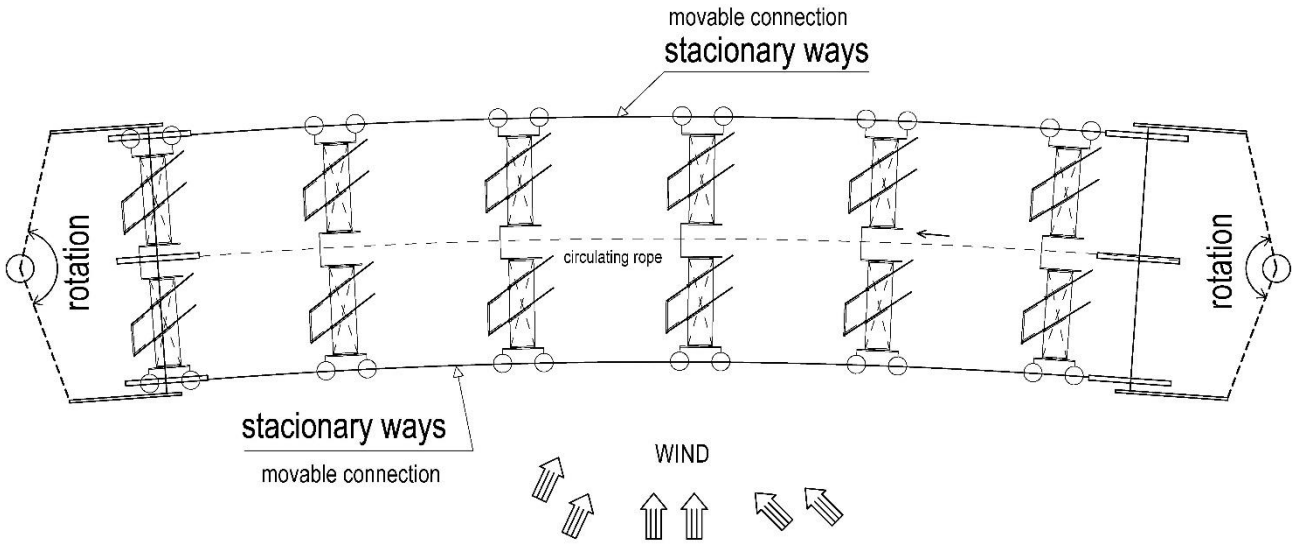

Fifth group - 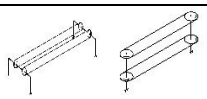 way with a combination of one stationary rope and one moving rope.

It is a structurally simple solution of the operation of the wind cable car where the unevenness of the action of forces on the carriage by the action of wind and the resistance of the moving rope is captured through a pair of axles of the wheel mechanism to the rigidity of the stationary way and the sliding device when firmly fixed on the moving rope is eliminated by connecting the carriage to the moving rope at one point only.

a) The case of a rope arrangement with two closed loops next to each other. 

side view

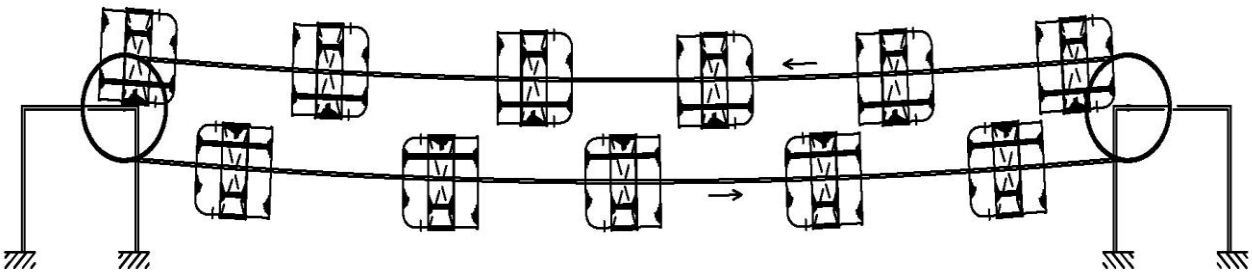

ground plan

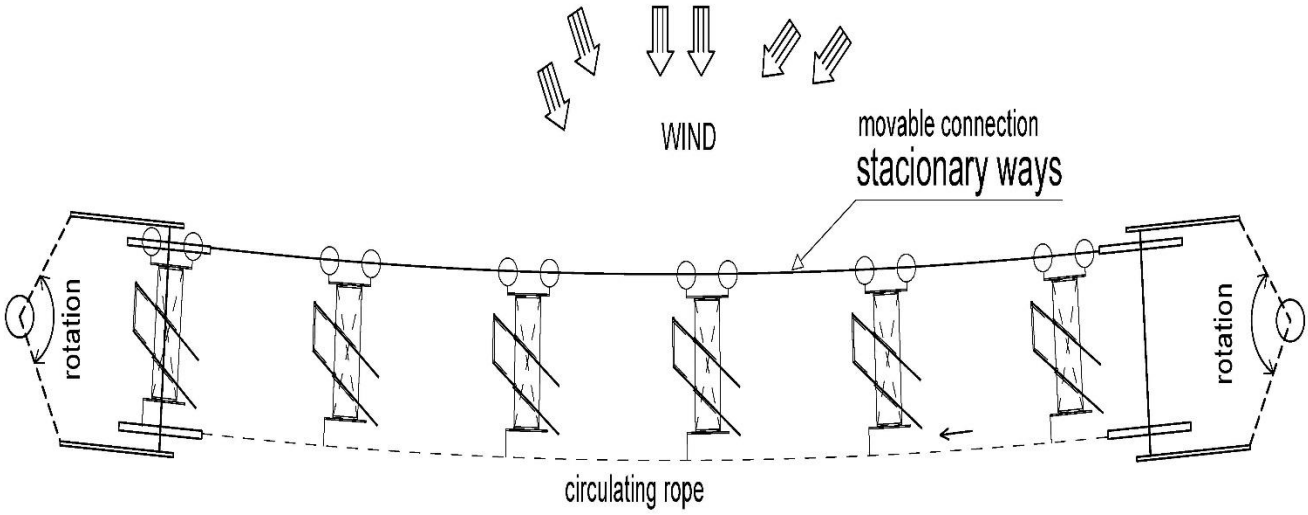

ground plan

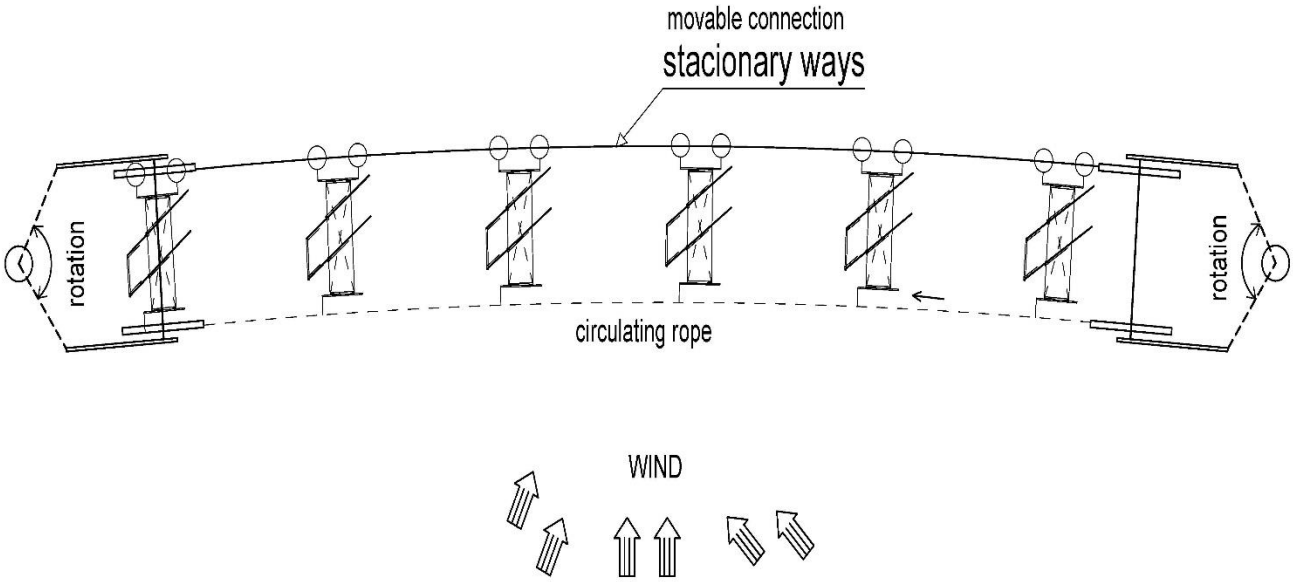

b) The case of a rope arrangement with two closed loops below each other. 

side view

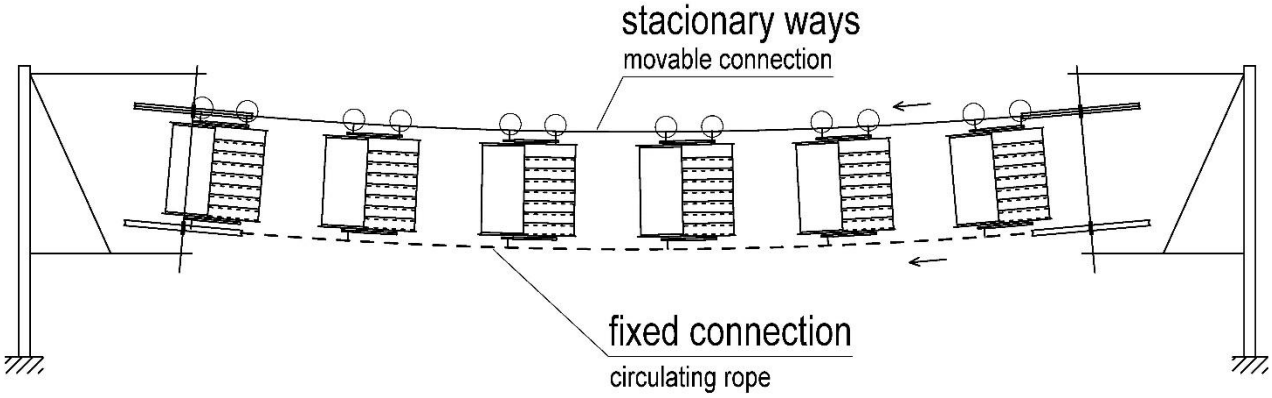

ground plan

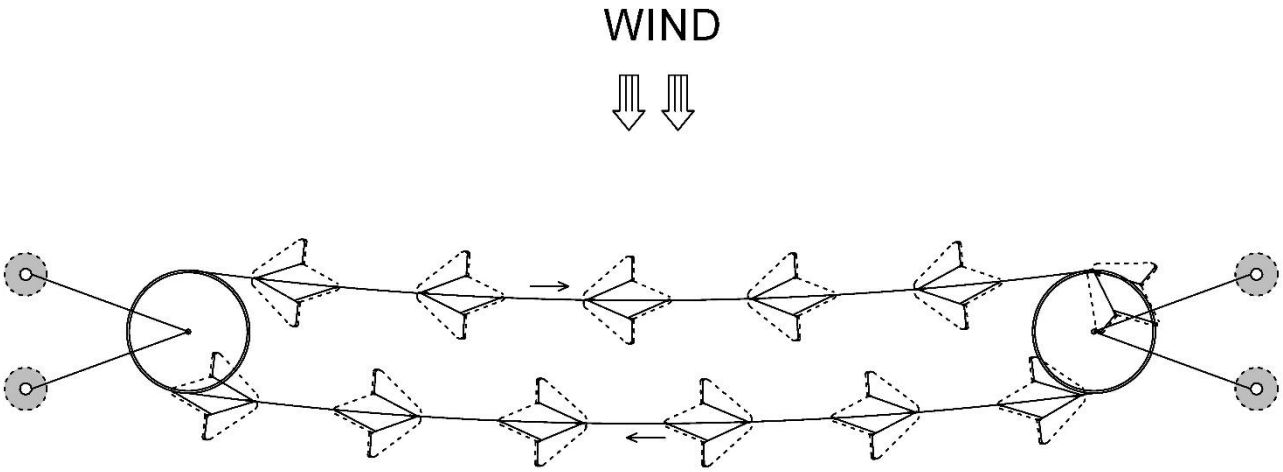

ground plan

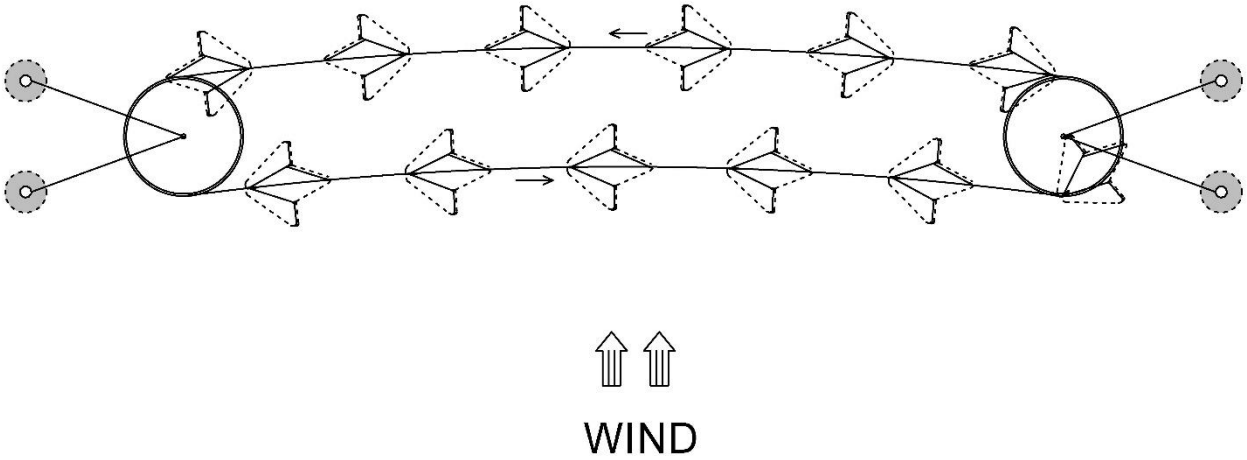

functional model from the workshop

The model of the carriage is suspended in this case with a fixed connection to the upper rope at one point and a movable connection to the lower rope at two points

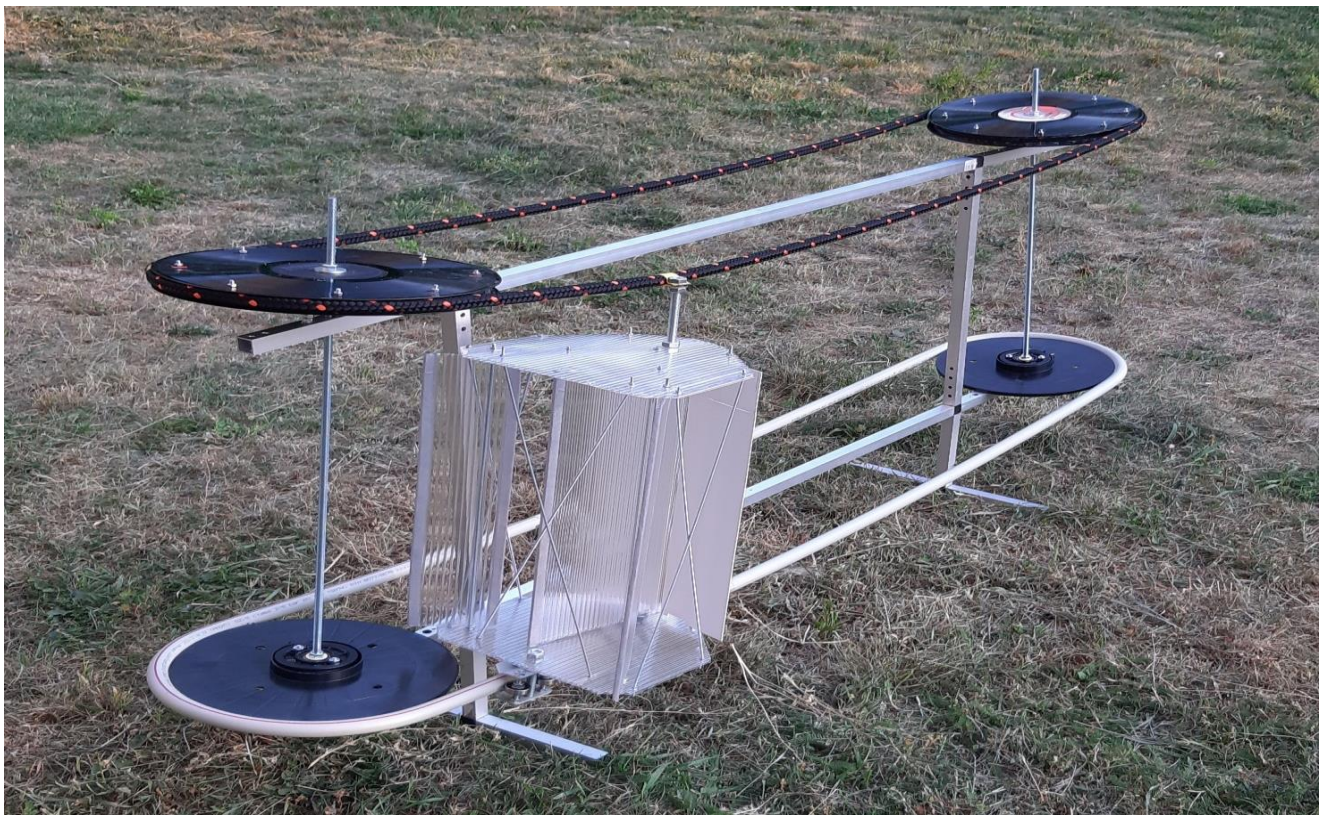

7. Evaluation of the best and simplest solution of wind cable car construction.

After considering all the knowledge and influences on the construction of the wind cable car, the most suitable construction seems to be cable cars with three closed loops of ropes arranged below each other, where the highest and lowest ways are stationary with movably rope-connected carriages and the middle way is movable with a fixed rope connection.

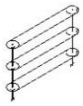

Both axes are inclined perpendicularly to the deflection trajectory and the way is linear in the groundplan with only two turns. The carriage structure is reduced to only one main central moving surface with two secondary moving surfaces on both sides of the main surface. The definition of the surface movement will be limited by the cable length that will connect the end of the area and the next carriage.

The evaluation is assessed according to the following parameters:

- such a construction adapts naturally by its shape of the way and the inclination of the pulley axes to the action of the weight of the ropes and the carriages and the overhang of the ropes is arranged in a chain curve, the carriages rotating in a plane perpendicular to the curve - this means that the ways do not need support wheels
- by the action of the wind in the horizontal direction, the ropes are tensioned in a favorable plane parallel with pulleys
- the wind load acts symmetrically on the structure - the rope braking under the influence of the generator is located in the middle
- the tow rope is not subjected to vertical forces from gravity, as they are transmitted to both fixed ropes
- the central rope does not tend to slip out of the pulley, because it is supported by a rod – carriage mast
- the deflection of the carriage mast is prevented by a four-point wheel connection

- the individual carriages are connected by a tow rope
- when rotating round the pulleys, the sliding mechanism is not necessary, as the connection to the tow rope is only at one point
- there is no need to solve the parallelism of the ropes, because only one rope in the middle is movable.
- the entire way structure can be hung on opposite existing supports without building central supports
- the construction is less demanding in terms of material, it is light and easy to be made

side view

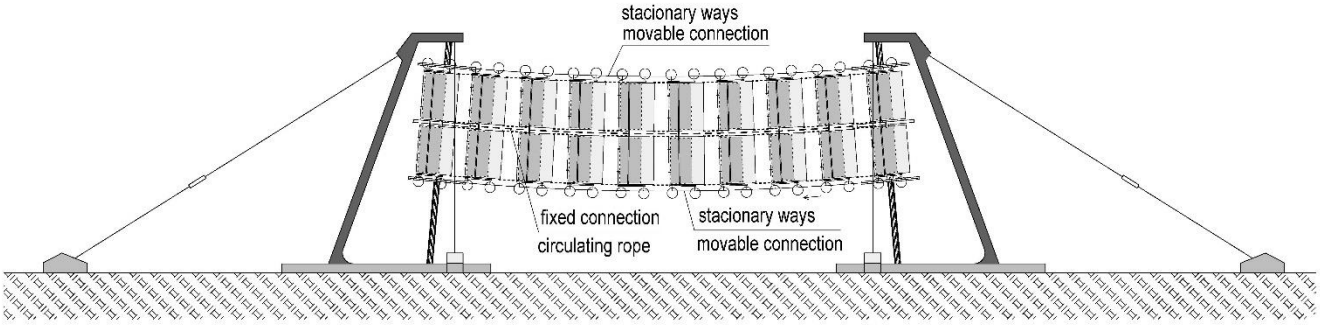

groundplan

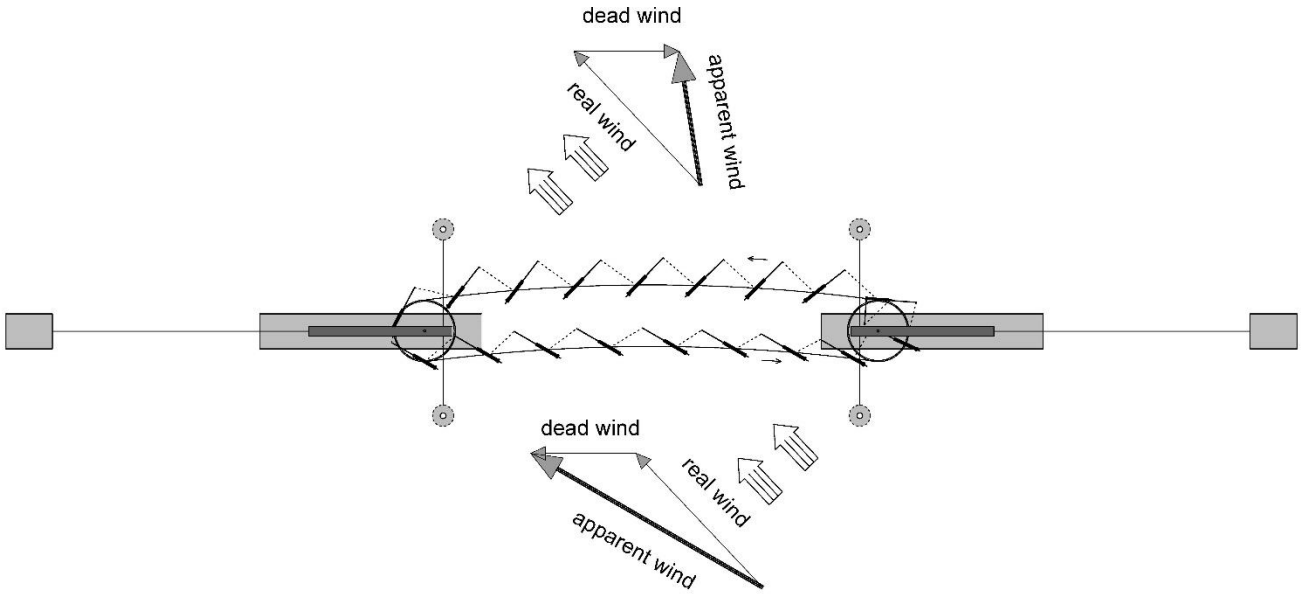

groundplan

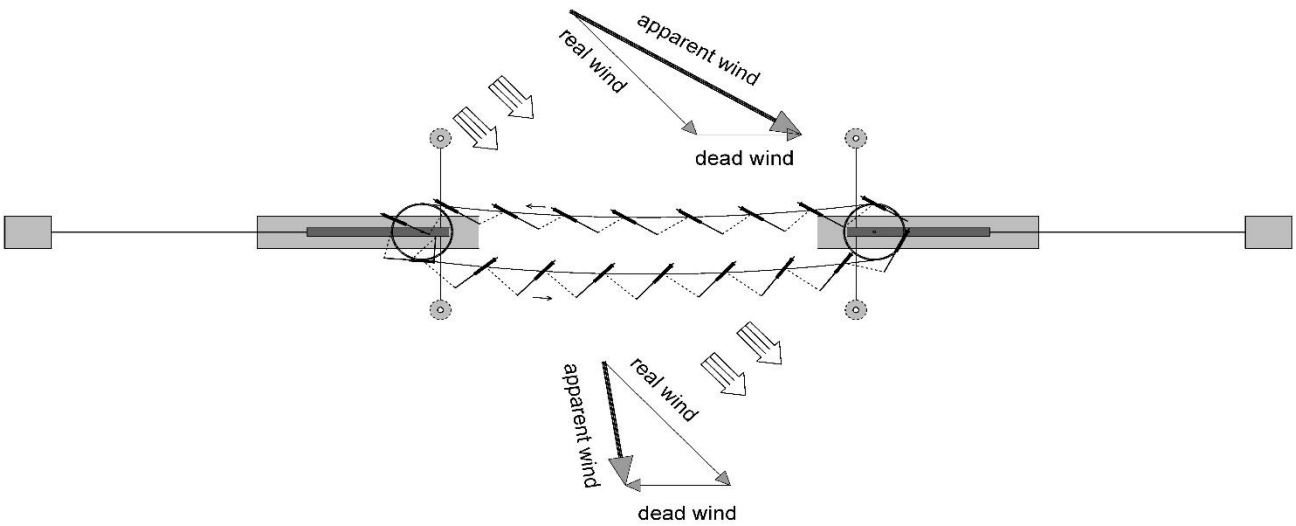

groundplan

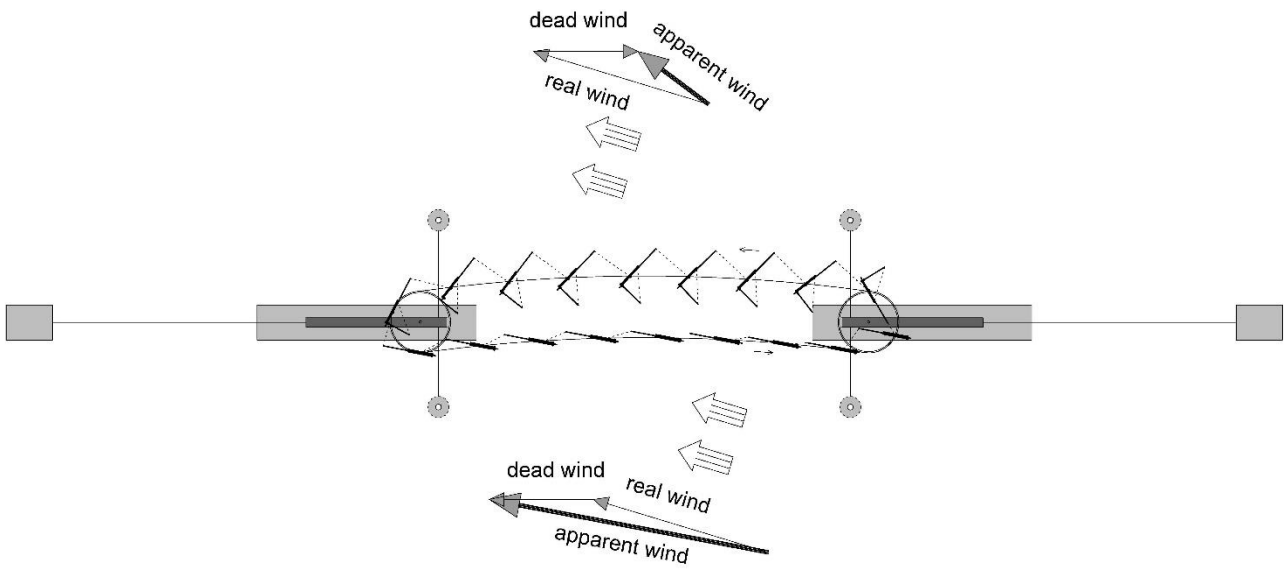

8. Advantages of the wind cable car

In common practice, there are two types of wind turbines, namely turbines called VAWT - turbines with the vertical axis of rotation and wind turbines HAWT - turbines with the horizontal axis of rotation. The wind cable car extends this knowledge with a new type of linear device. There is enough wind to meet the needs of energy requirements of humanity - if wind farms could be assembled efficiently and on a large scale.

The advantages of the wind cable car are:

- simplicity of the construction where large moments of force do not act on the individual parts of the carriage structure loads because the components of the carriage are fixed in at least two points and do not act on the parts by centrifugal force of the carriage design like in wind devices with the vertical and horizontal axis of rotation.
- possible modular implementation of the whole system and a large number of wind carriages on ropes.
- use of force transmission from the wind to the rope, which is made of high-strength material and is stressed only by traction.
- environmentally friendly construction that does not burden the environment by killing living creatures, making noise and vibration from high speed parts of the equipment.
- possibility of making a massive structure and accumulating the energy obtained from a large number of partial forces of wind carriages by transmission by circulating ropes to rotating pulleys and further to one electric energy generator.
- possibility of placing the wind cable car on existing buildings and existing structures closer to the energy consumer.
- use of easily accessible construction materials.
- economically favorable result due to the size of the investment in the construction and quantity of the obtained energy.
- location of the wind cable car in places with other economic land use, for example above agricultural land and in places above water areas.
- use of very strong winds and gusts of wind as well as very weak airflow.
- simplicity of the construction without the use of large cranes and construction mechanisms.
- easier maintenance compared to the existing propeller turbines and non-degradation of the landscape architecture while obtaining energy from the wind.
- automatic start-up without an auxiliary starting device.
- making less noise due to low speed.

- no generation of solid, liquid or gaseous emissions or waste during the operation (if we do not take into consideration the overall life cycle, in particular construction and accompanying service activities).
- no energy required to extract, process or import any fuel
- built-up area of the wind cable car as a power plant is minimal
- return to the "green field" state is relatively easy after the end of the operation
- construction materials of the power plant are recyclable

9. Use of the wind cable car

The wind cable car can be used to convert the kinetic energy of the wind into mechanical energy, for example as a driving force for wind turbines, pumps and the like. The industrial usability lies mainly in building the energy industry from renewable energy sources. The advantage of increasing the wind powerplant output is the possibility to build wind cable cars from a large number of wind carriages. The variability of the elements is very great. For example, a type of wind cable car with a moving way with ropes arranged below each other and basic-type wind carriages with rotating vertical plates, in which the ropes rotate on pulleys in four corners of a rectangle can also be installed on a high city building with a flat roof. One of the rotating pulley axles is connected to the electric energy generator that will supply the building with electricity. The present invention finds great use also in the supply of cheap electricity to an increasing number of electric charger stations for the mobility of electric cars.

10. Evaluation and social benefit

We all need energy for our daily lives. The current way of using fossil fuels is neither clean nor sustainable, but on the contrary, limited in time. Ensuring sustainable development and reliability of the fuel supply requires the production of energy using wind energy as well. The development of wind power plants is one of the most dynamically developing technical industries in the world. According to statistics and percentage comparisons, wind energy is the fastest growing electricity generation sector today. Global climate change represents a significantly greater danger to humans and nature than wind farms, which in the end replace the combustion of fuels.

With the advent of the Industrial Revolution, the wind was a bit forgotten. Currently, through the use of modern technologies wind energy is starting to be used again as before. The primary motivation for the construction of wind farms should be the protection of the environment through environmentally sound use of this renewable energy source. The wind energy is one of the most important types of the globally renewable energy sources used for electricity generation.

In the past, wind energy was converted directly into mechanical work, such as pumping water or grain milling. Today, functional devices of this type are rather a curiosity. However, it has become much more important to use the wind energy to generate electricity.

This way of using wind energy has its advantages and disadvantages. Compared to the classic power plants the installation of wind turbines is simple and they can be built and connected in a relatively short time to the public network. A technically simple way of directly converting wind energy into electricity is a great advantage of wind energy over the energy obtained by other technical methods. However, the potential for the wind energy is much larger. On the other hand, it is important that the price of electricity produced from the wind is comparable in many places today or even lower than the price of electricity produced from coal, gas or uranium. Experiences from Germany and Denmark strictly confirm this which is also the main reason for the massive development of wind turbines in these countries.